Summary of the U.S. DOE Informational Meeting on Nuclear Fuel Cycle Options held at Argonne National Laboratory on April 25, 2012

Background and Objectives

As part of the activities leading to a comprehensive evaluation and screening of nuclear fuel cycle options in 2013, the United States Department of Energy (U.S. DOE) Office of Fuel Cycle Technologies (FCT) held an *Informational Meeting on Nuclear Fuel Cycle Options* at the Argonne National Laboratory, Argonne, IL, April 25, 2012.

The meeting was open to participants knowledgeable in nuclear fuel cycles. It was announced in the *Federal Register Volume 77, Number 62 (Friday, March 30, 2012)*.

The meeting was attended by about 70 participants.

The objectives of the informational meeting were:

- Describe the purpose and objectives of the 2013 Evaluation and Screening effort.
- Discuss the planned approach for ensuring that the set of fuel cycle options considered is comprehensive with respect to the range of fuel cycle performance.
- Provide answers to participant questions on development of the fuel cycle options list and how they may contribute to this list.

The purpose of the Evaluation and Screening effort is to provide information to U.S. DOE about the potential benefits and challenges of nuclear fuel cycle options (i.e., the complete nuclear energy system from mining to disposal) that can be used to strengthen the basis and provide guidance for the activities undertaken by the Office of Fuel Cycle Technologies. To achieve this objective, a comprehensive set of fuel cycle options needs to be first defined and then evaluated, followed by screening to identify a relatively small number of promising fuel cycle options with the potential for achieving substantial improvements compared to the current nuclear fuel cycle in the United States. Improvements will be measured in terms of broadly defined economic, environmental, safety, non-proliferation, security, and sustainability goals.

The meeting was used to invite input from participants knowledgeable in nuclear fuel cycles, particularly those from universities, industry and national laboratories, in order to ensure that the set of fuel cycle options developed for the evaluation and screening provides a comprehensive representation of potential fuel cycle performance with respect to the evaluation criteria.

Meeting Proceedings

To accomplish the meeting objectives and inform participants about the program direction for the 2013 screening and evaluation, the meeting covered the following topics:

- Purpose and Objectives of the 2013 Evaluation and Screening Effort
- Approach for Development of Sets of Fuel Cycle Options and Groups
- Examples of Fuel Cycle Options

- Process for Submitting Fuel Cycle Concepts
- Fuel Cycle Characteristics Affecting Performance

Time was also devoted to Questions and Answers. The Agenda for the meeting is provided in Attachment A.

In Attachment B are the answers to the key questions raised and discussed during the meeting. The presentation materials for the meeting can be obtained from *http://www.inl.gov/conferences/nfco/presentations.shtml*.

The list of participants at the meeting is given as Attachment C.

Input Requested From Participants

The participants were invited to submit concepts for fuel cycle options. The information submitted only needed to have descriptions to allow the concept to be sufficiently understood and placed into an appropriate fuel cycle option group. The concepts need not have been analyzed in detail and it was noted that the submittals need not contain any analysis results and should contain only information that can be made public. The information in each concept submittal was to be less than two pages of text, supported by material flow diagrams. Proposed concepts were requested by May 25, 2012.

Submitted Concepts

The intent is to include submitted concepts in the fuel cycle options list, categorized and grouped as appropriate. Eight submittals were received from the participants in the Nuclear Fuel Cycle Options Meeting of April 25. A list of the concepts is contained in Attachment D. One of the submittals did not describe a full system option in the conventional technological sense, but rather proposed that collocation and integration of back-end fuel cycle facilities and a repository be given consideration. The other seven submittals described 2- and 3-stage fuel cycle options. In general the submitted concepts represent fairly standard ones (with some variants) that are represented by the options being developed by the U.S. DOE national laboratory team that will perform the evaluation and screening.

Conclusions

The U.S. DOE Informational Meeting on Nuclear Fuel Cycle Options, held on April 25, 2012, successfully communicated information on the effort to develop a comprehensive fuel cycle options list for a planned Evaluation & Screening activity, and also provided an opportunity for participants to contribute to this list. Briefings were given on the purpose and objectives of the 2013 Evaluation and Screening activity and the type of information requested from meeting participants. There was broad participation from industry, universities, and national laboratories. The meeting resulted in eight submittals from the participants for concepts that will be considered as part of the 2013 Evaluation and Screening effort.

Attachment A

U.S. DOE Informational Meeting on Nuclear Fuel Cycle Options
Theory and Computation Center
Argonne National Laboratory
Wednesday, April 25, 2012

AGENDA

Time	Subject	Lead
8:30 – 8:45 am	Welcome Address	R. Wigeland/T. Taiwo
8:45 – 9:00 am	Opening Remarks	B. P. Singh
9:00 – 10:30 am	Purpose and Objectives of the 2013 Evaluation and Screening Effort *(Background, Context, Overall Process)*	R. Wigeland
10:30 – 10:45 am	**Break**	
10:45 – 12:00 noon	Fuel Cycle Characteristics Affecting Performance	T. Taiwo
12:00 – 1:15 pm	**Lunch (on your own)**	
1:15 – 2:30 pm	Approach for Development of Sets of Fuel Cycle Options and Groups	M. Todosow
2:30 – 3:15 pm	Examples of Fuel Cycle Options	T. Taiwo
3:15 – 3:30 pm	**Break**	
3:30 – 4:15 pm	Process for Submitting Fuel Cycle Concepts *(Role of Participants, Requested information, and Steps)*	R. Wigeland
4:15 – 5:15 pm	Additional Questions and Answers	T. Taiwo (moderator)
5:15 – 5:30 pm	Closing Remarks	R. Wigeland
5:30 pm	**Adjourn**	

Attachment B

U.S. DOE Informational Meeting on Nuclear Fuel Cycle Options
Theory and Computation Center
Argonne National Laboratory
Wednesday, April 25, 2012

Key Questions and Answers (Q&A)

1. **Who is allowed to submit a fuel cycle concept for consideration and how many concepts can be submitted?**
   The meeting participants and the general public that are familiar with fuel cycle systems can submit concepts. There is no limit on the number of concepts that can be submitted by an individual or institution. It is intended to post the submitted concepts on the open meeting website and so only information that can be shared with the public should be provided in the concept submission. All proposed concepts should be sent to *fuelcycleoptions@bnl.gov*.

2. **Would the participant who submits a concept be paid for the idea and its analysis to support the 2013 Evaluation and Screening of nuclear energy systems?**
   There is no plan to pay the participants for the effort required to submit concepts. The type of information needed to describe a concept is very limited and no analysis needs to be submitted. The current plan is to ensure a comprehensive list of nuclear fuel cycle options for the 2013 Evaluation and Screening. The intent is to include submitted concepts in the fuel cycle options list, categorized and grouped as appropriate. Such a concept might however not be the representative option of a group. The organization that submits a concept will however be acknowledged in the meeting summary.

3. **Are the presentation materials from this meeting to be posted in an open site?**
   All presentation materials will be posted in the open meeting website *http://www.inl.gov/conferences/nfco/presentations.shtml*. Additionally, a meeting summary, including all the submitted concepts will also be posted.

4. **Is an Independent Review of the 2013 Evaluation and Screening process and results going to be conducted?**
   An independent review of the 2013 Evaluation and Screening is planned to be completed prior to finalization of the Evaluation and Screening Report. The final report of the Independent Review Team (IRT) will be publicly available.

5. **How is the 2013 Evaluation and Screening related to the 2011 Pilot Screening?**
   The evaluation and screening of nuclear energy systems builds on the success of a pilot screening completed in 2011 and incorporates the lessons learned throughout the process. The process consists of four major steps: (1) Define what nuclear energy systems will be evaluated and screened; (2) Develop the metrics to measure performance; (3) Conduct the evaluation and screening; and (4) Evaluate the results. See *Screening Method for Guiding R&D Decisions: Pilot Application to Nuclear Fuel Cycle Options*, August 2011, http://nuclear.energy.gov/pdfFiles/DOE_NE_Screening%20Brochure_web.pdf.

6. **What will evaluation and screening accomplish?**
   The evaluation and screening methodology provides a systematic, objective, and transparent method for evaluating nuclear energy systems according to their performance in meeting Fuel Cycle Technologies (FCT) program objectives. This in turn (1) Improves the program's ability to clearly identify and prioritize research and development (R&D) needs and better communicate the rationale for R&D directions, funding decisions, and policy making; (2) Enhances the ability of the program to formulate and execute program budgets; (3) Allows the program to more readily adapt to future policy changes with rapid determination of how any changes impact the prioritization of R&D for key technologies; and (4) The methodology offers the prospect of facilitating dialog among a variety of stakeholder groups interested in U.S. energy policy and the future of nuclear energy in the U.S. by connecting the specific R&D directions to the evaluation criteria.

7. **What is a nuclear energy system?**
   A nuclear energy system includes all functions required for using nuclear energy from mining through disposal, and everything in between (also referred to as a "fuel cycle option" for this Evaluation & Screening effort). A complete nuclear energy system consists of three major parts (front-end option, nuclear power alternatives, and disposal options) and contains all aspects required for the use of nuclear energy, from mining through disposal. Nuclear power alternatives include both once-through and recycle approaches with regard to fuel management. Each nuclear power alternative can be combined with appropriate front-end and disposal options such that the entire range of potential nuclear energy system performance is covered.

8. **What systems will be evaluated and screened?**
   The set of nuclear energy systems that will be considered in the 2013 Evaluation and Screening will come from several sources, including prior studies, and input invited from industry, universities, national laboratories, and the public. An electronic database, called the Fuel Cycle Catalog, will house the comprehensive set of nuclear systems along with detailed information on system performance, the relevant technologies, and the performance metrics. Overall, the resulting set of nuclear energy systems to be evaluated and screened is intended to: (1) Be as comprehensive as possible; (2) Group systems with similar high-level fuel cycle characteristics affecting performance; and (3) Identify a representative for each group that will be evaluated and screened in detail and use the results to represent the entire group. This reduces the time and expenses needed to evaluate the complete set, while not compromising the goal of being fully comprehensive. Full consideration will be given to concepts, ideas, and evaluation and screening approaches that were introduced in previous U.S. DOE studies and efforts, such as during the Nonproliferation Alternative Systems Assessment Program (NASAP) in the late 1970s, International Nuclear Fuel Cycle Evaluation (INFCE) in 1980, and Gen IV Nuclear Energy Systems in the early 2000s.

9. **What can you tell us about the Criteria and Metrics for the 2013 Evaluation and Screening and would input on these be sought from external groups?**
   Performance metrics are needed to conduct the evaluation and screening of nuclear energy systems. It is desirable that the metrics are quantifiable to the extent possible, and the use of qualitative metrics requiring expert elicitation is both minimized and clearly identified. For example, for a criterion on resource utilization, quantitative performance metrics could be envisioned that measure the amount of natural uranium needed per unit of energy generated. Performance metrics for each criterion will be developed in cooperation with FCT program

participants as well as others within DOE. Input will be sought from other stakeholders before the metrics are finalized.

10. **Is there plan to consider the important element of transition from the current U.S. fuel cycle to an advanced fuel cycle?**
    Analysis of transitions from the current fuel cycle to proposed future ones are planned to be conducted following the 2013 Evaluation and Screening effort. The evaluation and screening is focused on identifying fuel cycles that will offer benefits compared to what we have today. Consequently, the study will focus on evaluation and comparison of values for representative fuel cycle options at steady-state equilibrium conditions. Some of the criteria that will be used for the evaluation and screening, e.g., the institutional issues which include compatibility with current fuel cycle, will capture some of the considerations associated with transitioning from one fuel cycle to another.

11. **Is the Evaluation and Screening U.S. or globally focused?**
    The focus is on prioritization of R&D needs in the context of U.S. domestic fuel cycle options. In evaluating U.S. domestic options using the evaluation criteria, it is recognized that a global context may need to be considered in certain cases, for example when evaluating proliferation risk.

12. **Are impacts of uncertainties in fuel cycle data to be considered as part of the 2013 Evaluation and Screening?**
    Approaches for quantifying the impacts of uncertainties on the results will be considered for the 2013 Evaluation and Screening.

Attachment C

U.S. DOE Informational Meeting on Nuclear Fuel Cycle Options
Theory and Computation Center
Argonne National Laboratory
Wednesday, April 25, 2012

LIST OF PARTICIPANTS (Registrants)

Last Name	First Name	Company
Abry	Lori	Argonne National Laboratory
Alajo	Ayodeji	Missouri University of Science and Technology
Bader	Sven	AREVA Federal Services LLC
Bates	Connie	Idaho National Laboratory
Berry	R. Stephen	The University of Chicago
Buelt	Jim	Pacific Norwest National Laboratory
Carter	Joe	SRNS
Chirayath	Sunil	Texas A&M University
Clemmens	Jack	Shaw Environmental & Infrastructure
Collins	Emory	Oak Ridge National Laboratory
Croff	Allen	Vanderbilt University
Crozat	Matthew	Department of Energy
Czerwinski	Ken	University of Nevada, Las Vegas
Daum	Rob	Electric Power Research Institute
Dixon	Brent	Idaho National Laboratory
Feng	Bo	Argonne National Laboratory
Filburn	Thomas	University of Hartford
Forsberg	Charles	Massachusetts Institute of Technology
Foyto	Leslie	MU Research Reactor
Franceschini	Fausto	Westinghouse
Freeze	Geoffrey	Sandia National Laboratories
Ganda	Francesco	Idaho National Laboratory
Gehin	Jess	Oak Ridge National Laboratory
Gerig	Rodney	Argonne National Laboratory
Halsey	William	Lawrence Livermore National Laboratory
Harrison	Thomas	Oak Ridge National Laboratory
Hoffman	Edward	Argonne National Laboratory
Huff	Kathryn	Used Fuel Disposition Campaign
Jensen	Cindie	Idaho National Laboratory
Kim	Taek	Argonne National Laboratory
Lineberry	Michael	Idaho National Laboratory
McConnell	Steven	Savannah River Nuclear Solutions
McGee	Donald	AREVA
Myneni	Ganapati	Jefferson Lab
Nash	Kenneth	Washington State University
Nilsson	Mikael	University of California Irving

Last Name	First Name	Company
Omotowa	Olumuyiwa	University of Idaho
Parsons	John	Massachusetts Institute of Technology
Pereira	Candido	Argonne National Laboratory
Phelps	Suzanne	Nuclear Energy Institute
Phillips	Christopher	EnergySolutions
Pierson	Mark	Virginia Tech
Pitcher	Eric	Los Alamos National Laboratory
Price	Laura	Sandia National Laboratory
Puig	Francesco	Argonne National Laboratory
Rao	Linfeng	Lawrence Berkeley National Laboratory
Rosner	Robert	University of Chicago
Rothwell	Geoffrey	Stanford University
Rudisill	Tracy	Savannah River National Laboratory
Sadasivan	Pratap	Los Alamos National Laboratory
Sanders	Robert	Enercon Services, Inc.
Singh	BP	Department of Energy
Sollima	Calogero	NPRE-University of Illinois
Stao	Goldberg	Argonne National Laboratory
Taiwo	Temitope	Argonne National Laboratory
Todosow	Michael	Brookhaven National Laboratory
Tsvetkov	Pavel	Texas A&M University
Tulenko	James	University of Florida
Turinsky	Paul	North Carolina State University
Turner	Stephen	EnergySolutions-TPMC
Uddin	Rizwan	University of Illinois
Walton	Melissa	Argonne National Laboratory
Wheeler	Jack	Department of Energy
Wigeland	Roald	Idaho National Laboratory
Wood	Thomas	Pacific Norwest National Laboratory
Xu	Yunlin	ANL/University of Michigan
Yacout	Abdellatif	Argonne National Laboratory

Attachment D

USDOE Informational Meeting on Nuclear Fuel Cycle Options
Theory and Computation Center
Argonne National Laboratory
Wednesday, April 25, 2012

FUEL CYCLE CONCEPTS SUBMITTED BY PARTICIPANTS

This attachment contains the fuel cycle concepts that were submitted by participants following the informational meeting. The table below contains the titles of the concepts and the institutions that submitted them. The following pages contain the full descriptions of the concepts as submitted.

Concepts and Submitting Institutions

Title of Concept	Institution
Collocation and Integration of Repository and Back-End Fuel Cycle Facilities	Charles Forsberg, Massachusetts Institute of Technology
Subcritical Advanced Burner Reactor (SABR) Fuel Cycles	W. M. Stacey and B.Petrovic, Georgia Institute of Technology
Nuclear Fuel Cycle Options for the 2013 Evaluation and Screening by the USDOE NE	Sunil S. Chirayath, Nuclear Security Science and Policy Institute. Nuclear Engineering Department, Texas A&M University, College Station
Nuclear Fuel Cycle Option Submission – Accelerator-Driven Subcritical System for Spent Fuel Amelioration without Reprocessing	Mark Pierson, Ph.D., Virginia Tech, Mechanical Engineering Department, Nuclear Engineering Program
LWR(LEU) to FR(TRU/Th)* to BRX(U-233/Th) *with or without LWR(Pu/Th)	Westinghouse Electric Co.
EPRI Response to DOE-NE Invitation for Comments on Nuclear Fuel Cycle Options	Andrew Sowder, EPRI
Nuclear Fuel Cycle Concept for DOE-NE Fuel Cycle R&D Fuel Cycle Survey	Chris Phillips, EnergySolutions LLC
Three-Tier Full Recycle: LWR/LWR/ADS Three-Tier Full Recycle: LWR/SFR/ADS Three-Tier Full Recycle: LWR/HWR/HWR	Holly Trellue, Eric Pitcher, Rich Sheffield, LANL

Collocation and Integration of Repository and Back-End Fuel Cycle Facilities – Charles Forsberg, Massachusetts Institute of Technology

Charles Forsberg: cforsber@mit.edu, April 30, 2012
Submittal to DOE Fuel Cycle Options Study

Collocation and Integration of Repository and Back-End Fuel Cycle Facilities

The fuel cycle option of collocation and integration of back-end facilities with the repository has three major impacts on the choice of fuel cycle and path forward: (1) it enables meeting several potential metrics that are impossible by traditional choices of fuel cycles, (2) it will change the relative standing of different fuel cycles for many sets of metrics, and (3) the decision of whether or not to implement collocation and integration has major impacts on the ability to site a geological repository. Consequently, understanding this issue is central to long-term fuel cycle choices and should be a near-term priority to provide near-term the technical support of any repository siting effort.

The current strategy of a stand-alone single-purpose repository is an historical legacy. Major fuel cycle facilities were built in WWII and the cold war before technologies and decisions were made about waste management. The option of collocation and integration of the fuel cycle with the repository was never considered. For an open fuel cycle, collocated facilities would include the repository, long-term spent nuclear fuel (SNF) storage, SNF inspection (Navy and private) facilities, safeguards R&D and training facilities, pilot reprocessing plants, and other such facilities. In each case there are cost and technical advantages in sharing the SNF receiving facilities associated with a repository and avoiding multiple shipments of SNF or high-level wastes from processing facilities to the repository. For some activities, such as SNF safeguards training and R&D, the repository offers unique advantages because it will have the widest selection of SNF types and ages of any facility in the country. There will also be other facilities that take advantage of both the repository and SNF receiving, such as repository R&D facilities.

For a closed fuel cycle, the repository site would also include reprocessing and actinide fuel fabrication facilities. Collocation (1) avoids shipping wastes from the reprocessing plant to the repository, (2) allows the use of common facilities such as SNF receiving facilities, and (3) allows the use of common security and auxiliary services. It enables shipping to a single facility with the operational freedom to decide later at no added cost to recycle or directly dispose of the SNF. The largest technical and economic impact of collocation and integration of backend facilities with the repository is greatly reducing waste volume constraints on the fuel cycle. Waste volumes today must be minimized to avoid transportation and storage constraints. On-site disposal eliminates those constraints with implications that can be understood by example.

Safeguards and Nonproliferation. A stand-alone repository implies the repository will require long-term safeguards because it contains concentrated or semi-concentrated fissile materials. The International Atomic Energy Agency (IAEA) allows termination of safeguards if the fissile concentration of the waste is sufficiently low as to be practically unrecoverable. If volume is not a constraint, there is the option with closed fuel cycles to dilute waste streams below safeguards termination limits and thus eliminate long-term repository safeguards. It is not known if this is viable for open fuel cycles. However, the resultant waste volumes are too large to ship thus the option requires collocation and integration of process facilities with the repository. This is the only technological option to accomplish such a goal.

Repository performance and Environmental Releases. Integrating and collocating the repository with reprocessing facilities has potentially a larger impact on repository performance than the differences between repositories in clay, crystalline, or salt geologies. Today waste forms are optimized to meet repository performance and economic goals with a strong emphasis on minimizing waste volumes to reduce waste transport and storage costs. If the waste volume constraints are relaxed (no transportation),

higher-performance waste forms are possible: (1) reducing waste loadings reduces radiation damage to the waste form, (2) waste forms with better performance but lower waste loadings can be used, and (3) for solubility-limited radionuclides, the waste form can be diluted with the nonradioactive version of that isotope to reduce radionuclide releases from the waste form. It also opens low-cost options for disposal of tritium, krypton, and other radionuclides that may enable lower releases from processing facilities.

Fuel cycle costs. There is the potential to dramatically lower closed fuel cycle costs with the cost reductions dependent upon the fuel type. The Hanford defense Purex plant processed 5000 to 7000 tons of SNF per year versus the LaHague (the largest commercial reprocessing plant) with a throughput of 1700 tons per year. The Hanford Purex plant is much smaller than LaHague facility. Part of the difference is because the original plans at Hanford were for on-site disposal. That made a mess; but, the question is what if it was done right with direct disposal below the reprocessing plant in a repository? Technically, there are many processes with much lower costs except that they make higher waste volumes and thus are not considered because the higher volumes translate into higher transportation and storage costs.

There are major institutional advantages for both open and closed fuel cycle facilities by collocation. By historical accident, we have a fuel cycle that separates most economic benefits (jobs, tax revenue, etc.) from liabilities (repository). Nobody would consider building a coal plant and shipping the wastes across the continent—but that the current nuclear energy strategy. A rough estimate is that an operating repository has perhaps a thousand direct jobs, integrating an open fuel cycle with the repository has a few thousand direct jobs, and integrating a closed fuel cycle with the repository will have over 10,000 jobs. This impacts local and state interest in hosting a repository.

We can't understand the relative advantages and disadvantage of different fuel cycles without understanding the implications of collocating and integrating the backend of the fuel cycle with the repository. The impacts are significantly different for different fuel cycles. The bad news is that the total available information on the implications of collocation and integration written in the last decade consists of a few papers in the open literature with one summary paper.[1] There has been a limited amount of work done overseas.

A significant effort is needed to (1) define the differences between separate facilities and collocated-integrated facilities and (2) understand the technical, economic, and institutional implications. This implies major changes for both open and closed fuel cycles. With closed fuel cycles it changes preferred separations technologies and preferred waste forms. For both open and closed fuel cycles it implies the need for different institutional structures for the repository site when it becomes a multiuser facility rather than a single purpose facility. Its long-term importance is that it may partly determine fuel cycle choices and will certainly set much of the research agenda.

In the short term, it should be a high priority to create a credible understanding of implications for (1) whatever repository waste management authority that is created to site and develop a repository and (2) communities and states thinking about hosting a repository. The site requirements for collocated integrated backend of the fuel cycle with the repository are different than a stand-alone repository.

[1] C. W. Forsberg, "Integrating Repositories with Fuel Cycles: the Airport Authority Model," Paper 12007, *Proceeding of the International Congress on Advance Nuclear Power Plants*, Chicago, June 24-28, 2012

Proceedings of ICAPP '12
Chicago, USA, June 24-28, 2012
Paper 12007

Integrating Repositories with Fuel Cycles: The Airport Authority Model

Charles Forsberg
Massachusetts Institute of Technology
77 Massachusetts Avenue, Room 24-207B, Cambridge, MA 02139-4307
Tel: (617) 324 4010; Fax: (617) 258-8863; Email: cforsber@mit.edu

Abstract – *The organization of the fuel cycle is a legacy of World War II and the cold war. Fuel cycle facilities were developed and deployed without consideration of the waste management implications. This led to the fuel cycle model of a geological repository site with a single owner, a single function (disposal), and no other facilities on site. Recent studies indicate large economic, safety, repository performance, nonproliferation, and institutional incentives to collocate and integrate all backend facilities. Site functions could include geological disposal of spent nuclear fuel (SNF) with the option for future retrievability, disposal of other wastes, reprocessing with fuel fabrication, radioisotope production, other facilities that generate significant radioactive wastes, SNF inspection (navy and commercial), and related services such as SNF safeguards equipment testing and training. This implies a site with multiple facilities with different owners sharing some facilities and using common facilities—the repository and SNF receiving. This requires a different repository site institutional structure. We propose development of repository site authorities modeled after airport authorities.*

Airport authorities manage airports with government-owned runways, collocated or shared public and private airline terminals, commercial and federal military facilities, aircraft maintenance bases, and related operations—all enabled and benefiting the high-value runway asset and access to it via taxiways. With a repository site authority the high value asset is the repository. The SNF and HLW receiving and storage facilities (equivalent to the airport terminal) serve the repository, any future reprocessing plants, and others with needs for access to SNF and other wastes. Non-public special-built roadways and on-site rail lines (equivalent to taxiways) connect facilities.

Airport authorities are typically chartered by state governments and managed by commissions with members appointed by the state governor, county governments, and city governments. This structure (1) enables state and local governments to work together to maximize job and tax benefits to local communities and the state, (2) provides a mechanism to address local concerns such as airport noise, and (3) creates an institutional structure with large incentives to maximize the value of the common asset, the runway. A repository site authority would have a similar structure and be the local interface to any national waste management authority.

I. INTRODUCTION

The organization of the fuel cycle is a legacy of World War II and the cold war. Fuel cycle facilities were quickly developed and deployed without consideration of the waste management implications. This led to the fuel cycle model of a geological repository as a separate facility at a separate site. Today the United States does not have a repository site. No decisions have been made on future fuel cycles. It is the right time to ask if the isolated repository is the right model or if there are better ways to organize fuel cycles and repositories.

Recent studies[1] indicate large economic, safety, repository performance, nonproliferation, and institutional incentives to collocate and integrate all backend facilities. Site functions could include geological disposal of spent nuclear fuel (SNF) with the option for future retrievability, disposal of other wastes, reprocessing, SNF inspection (navy and commercial), radioisotope production, and other nuclear facilities that generate significant radioactive wastes. The site capabilities would evolve as fuel cycles evolved over time.

Collocation eliminates many functional requirements such as offsite transport of radioactive wastes that, in turn, reduce requirements such as minimizing waste volumes in process operations. Integration, such as shared spent nuclear fuel (SNF) and high-level waste (HLW) receiving and storage facilities, eliminates duplication of common

facilities for repositories, reprocessing facilities, and other facilities requiring SNF. Large economic savings are possible. Collocated and shared facilities create large incentives for related businesses to collocate at the site such as safeguards testing and training facilities, SNF examination facilities for development of better fuels, and radiation instrument test facilities. These businesses take advantage of the diversity of SNF and other wastes that are accessible at one site.

Collocation and integration of public and private facilities at the repository site requires a different technical and institutional structure. Given the success of airport authorities to manage similar complex technical and institutional systems, we propose the airport authority as a model for a repository site authority. Airport authorities manage airports with government-owned runways, collocated and sometimes shared public and private airline terminals, commercial and federal military facilities, aircraft maintenance bases, and related operations—all enabled and benefiting the high-value runway asset and their access to it via taxiways.

With the repository site authority the high value asset is the repository. The SNF and HLW receiving and storage facilities (equivalent to the airport terminal) serve the repository, any future reprocessing plants, and others with needs for access to SNF and other wastes. Non-public special-built roadways and on-site rail lines (equivalent to taxiways) connect facilities.

Airport authorities are typically chartered by state governments and managed by commissions with different members appointed by the state governor, county governments, and city governments. This structure enables state and local governments to work together to maximize job and tax benefits to local communities and the state. It creates a system where there are large incentives to maximize the uses and value of the common asset—the runway. Airport authorities have the necessary tools from bonding authority to long-term leasing of land and facilities to do site integration. This public-private state-local institutional structure is why a midlevel airport such as the Minneapolis St. Paul International Airport is a 10 billion dollar per year public-private business.

A repository site authority would have a similar structure. For the local communities and state government, such a strategy couples backend fuel cycle benefits (high-technology jobs, tax revenue, etc.) with the repository. A repository site authority would exist for each repository site, be chartered by the state and/or local governments, and be the local interface to any national waste management authority[2]. The subsequent sections provide the basis for the above observations and conclusions.

II. INCENTIVES TO COLOCATE AND INTEGRATE BACK END FACILITIES AND RELATED FACILITIES AT THE REPOSITORY

There are a large set of facilities that would benefit from collocation and integration with a geological repository[1, 3]. A partial list is shown in Table I. These can be broken down into classical fuel cycle facilities and a variety of other nuclear industrial activities.

TABLE I
Candidate Repository Site Authority Businesses

Facility	Ownership
Repository	Public (Private option)
Waste package manufacturing and other equipment	Private
Transportation (Operations)	Private
Waste Authority and Nuclear Regulatory Commission repository performance laboratories	Public
Government reprocessing facilities to support waste, defense and nonproliferation objectives	Public
Commercial reprocessing facilities	Private
Safeguards training and testing facility	Public
R&D on Advanced Fuel Cycles (Including pilot plants)	Public or private
SNF fuel examination facility	Public and/or private
SNF reconstitution facility	Private
SNF surface storage	Public or private
Medical isotope production	Private
Commercial radwaste processing	Private
University R&D	Public or private

II.A. Commercial Fuel Cycles

The traditional proposal for a repository is a single-purpose stand-alone disposal site. It is the only option that the U.S. has investigated. The concept of a stand-alone repository is a legacy of the cold war. Fuel cycle facilities were built before the development of waste management technologies such as repositories—thus sites were not selected for co-siting a repository.

Implicit with the concept of a stand-alone repository is the assumption that we will never want to reopen the repository to retrieve SNF for future use; that is, recovery and recycle of the fissile fuel content of SNF back into reactors. However, today we do not know if LWR SNF is a valuable resource or a waste—it depends upon uranium resources and future technological developments. This has led to the recommendation by the Blue Ribbon Commission and other groups that we adopt a long-term policy of storing SNF until we can make reasonable decisions on the future of SNF[2, 4].

SNF can be safely stored at the reactor, at a centralized disposal site, or in a repository designed for future SNF retrievability. If the repository is designed for disposal of SNF with the option of future retrievability, the repository becomes a fuel vault and a disposal facility—a different way to couple fuel cycles with the repository. The repository as a storage facility has several advantages relative to storage at reactor sites or centralized facilities.

- *Greater public acceptance of the nuclear enterprise*. Because of U.S. waste management failures, a policy of SNF surface storage appears to the public as kicking-the-can-down-the-road and not addressing waste management challenges.

- *Intergenerational equity*. A reversible repository, while maintaining options for future generations, minimizes costs to future generations if SNF is a waste.

- *Security*. Repositories are the ultimate in safe storage because they are far underground where even catastrophic events have little impact.

The technology to build repositories that allow recovery of SNF has been partly developed for most geologies—including tuff, salt, granite, and clay.[1,5] Several countries (France, Finland, etc.) have legal requirements for long-term SNF retrieval. The cost to incorporate retrievability into a repository is low if it is included as an initial design goal.

If SNF is retrieved to recover its fissile fuel value, there are large incentives to build the reprocessing plant to recycle the fissile material at the repository site. The SNF will be in waste packages (WPs) designed for disposal, not transport packages for offsite shipment. The SNF will have degraded over time. There will be significant costs to inspect and repackage SNF for shipment. The economic option would be to reprocess on site and avoid offsite transport of SNF. If SNF retrieval is a policy, then there are then incentives to choose a repository site with the land area and other features to allow a future reprocessing plant.

If a closed fuel cycle is chosen in the future with recycle of SNF, there are economic, nonproliferation, repository performance, and institutional incentives to locate and integrate the reprocessing plant with the repository. A reprocessing plant converts SNF into (1) new fuel assemblies containing fissile materials recovered from the SNF and (2) acceptable waste forms. If the reprocessing plant has to ship wastes to a disposal site, the waste forms have to be designed (1) for transport over public roads and (2) as acceptable waste forms for the disposal site. If the reprocessing plant is collocated and integrated with the repository, the requirement for transport over public roads is eliminated. Eliminating this one constraint has major implications.

- *Repository performance*. If wastes must be transported long distances, waste forms with high waste loadings must be chosen to minimize the waste volume to reduce transport costs. Without long-distance transport requirements and the resultant constraints on waste volumes, waste forms can be chosen based on only repository performance and cost—enabling better waste forms and reducing costs[1].

- *Safeguards termination*. If wastes contain significant quantities of plutonium and other fissile materials, there is a requirement for multi-generational long-term repository safeguards. However, dilution of such wastes can make the fissile materials "not practically recoverable" and safeguards can be terminated before disposal[6]. The economic requirement for safeguards termination is co-siting facilities so one can afford waste forms with lower waste loadings with a lower fissile content.

- *Transportation.* Costs and risks associated with waste transportation are eliminated.

- *Closed fuel cycle costs*. Collocating and integrating reprocessing and a repository can

result in major reductions in the cost of recycling SNF[1, 7]. In a reprocessing plant, less than 7% of the facility cost is associated with separation of fissile and fertile materials from SNF—the purpose of a reprocessing facility. About half the cost (TABLE II) is associated with waste management to meet the dual requirements of (1) a low-volume transportable waste form and (2) an acceptable waste form for disposal. Eliminating the long-distance transport requirements implies reductions in the waste management component of the reprocessing plant because a major constraint, waste volume, is relaxed.

TABLE II
Cost Breakdown of Reprocessing LWR SNF[8, 9]

Area	% Cost	Subarea	% Cost
Receiving	7.8		
Front End	25.5	Mechanical Feed Preparation	13.00
		Tritium Confinement	3.65
		Dissolution	8.16
		Feed Preparation	0.69
Offgas	5.74	Dissolver Off Gas	4.17
		Vessel Off Gas	1.22
		Head-end Off gas	0.35
Separations	6.59	Solvent Extraction Uranium	1.39
		Solvent Extraction Plutonium	1.56
		Solvent Treatment	1.04
		Acid and Waste Recovery	1.91
		Low-Enrichment Uranium Purification	0.69
High-Level Waste	10.42	HLW concentration	1.04
		Intermediate Level Waste Concentration	1.39
		HLW Solution Storage	3.13
		HLW Solidification	4.86
Product Conversion	6.6	Low-Enriched Uranium Conversion	3.99
		Plutonium Conversion	2.26
		Plutonium Storage	0.35
SNF/HLW Storage	26.9		
Clad Storage	10.4		

Collocating and integrating a reprocessing plant with a repository has major implications for the site. First, we may now have a private reprocessing facility costing ten or twenty billion dollars on the same land as the publically-owned repository—one located on the surface of the earth and one hundreds of meters directly underground. It's no longer a public or private facility. It's a mixture.

Second, there are large financial incentives for joint facilities. Spent fuel receiving, SNF/HLW storage, and clad storage (non SNF radioactive waste storage) are big, expensive facilities [TABLE II] required by both the reprocessing plant and the repository. There are economic incentives for a single receiving and SNF storage facility with truck and rail lines on one side, the repository surface facilities on a second side, and the reprocessing plant on a third side. There are also large operational cost savings and security advantages for a single security force for sensitive areas.

If economics is the primary driver for recycling SNF, only some of the SNF is likely to be recycled—the SNF with the highest fissile fuel content. This is similar to a mining operation where the higher assay ores are recovered and low assay ores are left in place. The repository and the reprocessing plant will both be handling SNF.

Collocation and integration transforms the site from a single purpose facility with a single owner and a single management structure to a complex mix of public and private facilities that change with time. It implies many more jobs and much larger number of high-paying, high-tech jobs. Only the repository remains a constant.

II.B. Non-Fuel-Cycle Facilities

Independent of the commercial fuel cycle or choice of fuel cycle, there are a variety of other businesses with incentives for collocation and integration with the

repository. Only some of these can be identified today. The most obvious include U.S. Nuclear Regulatory Commission and waste management authority repository confirmation R&D facilities that are tied to the site operations. Other likely facilities would be reprocessing R&D and pilot plant facilities that generate significant wastes and where there would be large incentives to work out what is required to create a commercial integrated reprocessing-repository facility.

There are many businesses that need access to a wide variety of types and ages of SNF. For example, the U.S. has a large program supporting the International Atomic Energy Agency (IAEA) safeguards inspection of foreign nuclear facilities. Much of this work involves confirming SNF inventories and that there have been no substitutions of SNF assemblies with "dummy" assemblies. The ideal safeguards test and training facility would have a large inventory of different types of SNF of different ages—making the repository site the preferred location. The same logic applies to testing any SNF handling equipment or instrumentation to be used at power reactors.

Some SNF is inspected and tested to determine how it performed and thus enable better designs of new fuel. This includes both commercial and government (primarily navy) SNF. A repository is a logical place for such fuel examination facilities because the SNF ultimately goes there. It avoids shipping the fuel to an inspection facility and then onto the repository. There is the potential for new related businesses. For a variety of reasons, some commercial SNF is discharged early or has been damaged. A central facility creates the possibility of mechanical recycle of partly burnt SNF back to reactors by fixing damaged fuel assemblies or processes such as DUPIC for conversion of LWR SNF into CANDU fuel. It would be a high-technology equivalent of auto recycle yard assembling new cars from the pieces of several old cars. The requirement for such a business is a large working inventory of SNF.

The U.S. government reprocesses SNF for a variety of reasons. Reprocessing has been used to recover plutonium and other materials for weapons. Some SNF has been reprocessed because it was in a chemically unstable form not suitable for long-term storage or disposal. High-enriched SNF from research reactors is reprocessed so the high-enriched uranium can be down-blended to non-weapons-usable low-enriched uranium. These and other special reprocessing missions will continue as long as there are research reactors, commercial nuclear power plants, and nuclear weapons. This has been traditionally done at the Department of Energy production sites—however many of the facilities have been shut down and the remaining facilities are very old. An integrated repository site is the logical site for future such facilities.

There are multiple businesses that generate significant radioactive wastes. For these businesses, there are incentives to be located at the repository site to reduce their waste management costs. As discussed earlier, the avoidance of waste transport over the road reduces requirements such as minimizing waste volumes that can reduce costs while at the same time improve the disposal of such wastes. There are two major categories.

- *Radioisotopes*. Radioisotopes are produced, purified, and packaged for medicine (Tc-99, etc.) and industry (Am-241, etc.) with radioactive waste generation.

- *Decontamination and waste processing*. Radioactive operations generate wastes. Clothing and equipment gets contaminated that has resulted in an industry that washes clothing and decontaminates equipment for reuse—with the generation of radwastes. Some wastes have particular chemical forms unsuitable for disposal and thus there are companies that treat these wastes to convert them to acceptable waste forms.

The employment associated with these related businesses (excluding reprocessing which has a far larger employment impact) is likely to be larger than with the repository. The related businesses will also increase the technical competence of the site. One of the difficulties with isolated sites is that few professionals want to live in such locations. However, if the complex becomes sufficiently large the area becomes attractive to professionals because other professionals are in the area to interact with and desired services are available.

Examples of this are Oak Ridge and Los Alamos, two cities that were originally very isolated. The small cities became attractive because of the combination of other professionals and a strategy to provide desired services such as high schools with national reputations for quality, libraries, and other such facilities.

II.C Secondary Businesses

Any large complex has a variety of support services from transportation to hotels. These are jobs and tax multipliers whose size will depend upon what is cosited with the repository. For a repository coupled to an open fuel cycle with SNF being buried underground, the most important such service is SNF transportation. It is complicated, big, and expensive. There are large

incentives for local communities and the host state to base such operations near the repository. Because the repository is the one location where all the transport equipment goes to, there are financial incentives to locate the transport support facilities near the repository—but not necessarily at the repository site.

III. AIRPORT AUTHORITIES

A multi-purpose back-end fuel cycle complex with a mixture of public and commercial facilities requires a different institutional structure than a single-purpose single-owner repository. We propose a site repository authority modeled after a common American institution—the airport authority.

Airport authorities were created to address a series of challenges with the development of the aircraft industry. Unlike the railroads where railroad stations were owned by each railroad, there were advantages for multiple companies to use the same airport to minimize the cost of the runways and use common services from weather forecasts to local mechanics. Many of today's major airport authorities were created in the 1930s and 1940s with the beginnings of commercial airline travel. They evolved with time. It is unlikely that anyone at the time could imagine the operations they support today.

Modern airports are complex operations with public runways, publically and privately collocated airline terminals, aircraft maintenance bases, manufacturing facilities, and related operations. All are enabled and benefiting from the high-value runway asset although in terms of capital investment, the runway does not dominate the cost of the airport. Many airports (Albuquerque, Knoxville, etc.) include both civilian and defense/government facilities—typically with the commercial operations on one side of the airport and the air force bases on the other side with shared runways. This implies variable security from traffic violations to nuclear weapons security—all on the same shared site.

Airport authorities are created with the goals of (1) assuring efficient and economic air travel to the local region, (2) maximizing local and state jobs and revenue, and (3) maintaining the required political support for the airport given that it has undesirable (noise) and desirable features. Their success requires strong political connections, industrial recruiting capabilities, and good strategic planning capabilities. The challenge in airport planning is to design a site, organization, and contractual arrangements that allows expansion, enables construction of multiuser facilities such as terminals, and enables construction of various private facilities—all with access to the runways.

Most large airport authorities are creations of state governments run by boards of directors. Typically the governor appoints some members of the board with other members appointed by local city and county governments. In some cases where the airport is close to state lines, governors of both states appoint commissioners. Because the boards represent both state and local interests, they can bridge the divide between state and local interests. There is a strong emphasis on maximizing jobs and taxes for the state and local governments while addressing local concerns.

For example[10], the Metropolitan Airports Commission (MAC), the manager of the Minneapolis St. Paul International Airport and six satellite airports, has commissioners appointed by the Minnesota governor, the mayor of Minneapolis, and the mayor of St. Paul. It is a public corporation. The chair and the 14 commissioners have staggered terms with 8 commissioners representing districts within the metropolitan area and 4 commissioners representing the outstate parts of Minnesota. The entire state has a vested interest—a design to maximize benefits to the entire state. In 2010, 10.6 billion dollars in business revenue, 1.3 billion dollars in local purchases, and 626 million dollars in state and local taxes were generated. It manages the 15th largest airport in terms of travelers each year. The complexity, variable security requirements, and scale of operations of large airport authorities are significantly larger than a multipurpose repository complex.

Airport authorities do not imply quiet, peaceful, and tranquil agreements on airport changes including expansions. There is controversy that often takes a decade for issues to be resolved. However, they have demonstrated a capability to ultimately solve problems. Similarly, a repository authority will have to address highly controversial issues.

IV. REPOSITORY SITE AUTHORITIES

Repositories have been viewed as stand-alone isolated facilities. What is proposed herein is a rethinking of the repository as (1) an integrated part of the nuclear fuel cycle and (2) an open multipurpose facility. That requires a change in the institutional structure. A repository site authority is a mechanism to create the proper incentives and drivers for the nation to fully benefit from a valuable resource. It is the same reason airport authorities were created.

It would be the local partner with any federal waste management authority with the goals to maximize benefits from the repository by making it a true multiuser facility with public and private facilities. Each repository would have its own repository authority reflecting local institutions and perspectives. Like airport authorities, it will have to grow and evolve over decades—building the repository is only the first step.

The recommendations of the Blue Ribbon Commission[2] are to create a national waste management authority. Because of the federal liability for disposal of SNF and short-term utility priorities, their priorities will be on SNF management. The history of single purpose agencies is that they are good method to address a single goal—but are unlikely to take a broader view because such actions are viewed as diverting from the primary goal. To use an analogy, an airport owned and operated by a single airline would have a very different set of goals than the traditional airport today.

For large countries such as the United States, there are large incentives for multiple repository facilities. Such facilities are large long-term investments measured in many tens of billions of dollars. A single reprocessing plant to process half the SNF that is currently produced each year would require an investment of ~$20 billion dollars[1]. The potential scale of operations, the advantages of redundancy, and giving local communities choices suggest development of multiple sites. The sites could be very different. One repository authority might want to be only a disposal facility while another would strongly encourage development of closed fuel cycle facilities. Different airport authorities have different visions, the same should be allowed for repository site authorities as long as safety and environmental standards are met.

A repository site authority would be created by the state and local governments with the goals to (1) assure an efficient, safe, and economic repository facility, (2) maximize local and state jobs and revenue, and (3) maintain the required political support for the repository given that it has both undesirable and desirable features. Like an airport authority, the commissioners would include members appointed by the governor, counties, and cities. Like an airport authority, success requires strong political connections, industrial recruiting capabilities, and good strategic planning capabilities.

The challenge for repository site planning is to design a site and institutional structure that allows expansion, enables construction and access to multiuser facilities such as SNF receiving facilities, and access to the repository. For very large facilities such as a reprocessing plant, this may include separate elevator/tunnel access to the repository at depth. The long experience with airport authorities and with port authorities provides a starting template of how to create such an organization.

The most difficult challenge will be defining the relationship and authority between the site authority and the national waste management authority—a matter of negotiation. The options could vary from the national waste management authority holding the repository license to the site authority holding the repository license. A single model for the nation should not be assumed. There are important liability and ownership issues. For example, a state government might chose to have the option in the future to take title of the SNF in the repository. If SNF is disposed of but a latter decision is made to develop a closed fuel cycle, the option of state ownership would legally assure any reprocessing plant would be built on site.

V. CONCLUSIONS

The organization of the fuel cycle is a legacy of World War II and the cold war. Fuel cycle facilities were developed and deployed without consideration of the waste management implications. This led to the fuel cycle model of a geological repository as a separate facility at a separate site. Recent studies indicate large economic, safety, repository performance, nonproliferation, and institutional incentives to collocate and integrate all backend facilities and a variety of other businesses at the repository site.

Such changes require changes in technology; however, the potential benefits are not achievable unless there are large changes in the institutional and business model of the repository. What is proposed is a fundamental change in the repository paradigm from an isolated, separate, single-owner/user facility to a center of multiple government and commercial activities based on a central asset—the repository.

In the context of the United States, the closest public/private institution to what may be required is the airport authority and the runway—a business and institutional model that combines public and private facilities. A repository site authority would be operated by a commission with members appointed by the state and local governments. It would be separate from the national waste management authority as proposed by the Blue Ribbon Commission. There are differences between repositories and airports; thus, significant work will be required to properly structure a repository site authority. There are differences in airport authorities that reflect differences between states; thus, one would not expect a

repository site authority in one state to be the same as a repository site authority in another state.

REFERENCES

1. C. W. FORSBERG, "Coupling the Backend of Fuel Cycles with Repositories", *Nuclear Technology* (In Press)

2. BLUE RIBBON COMMISSION on AMERICA'S NUCLEAR FUTURE, Report to the Secretary of Energy (January 2012), http://brc.gov/

3. C. W. FORSBERG, "Repositories as Desirable Industrial Facilities," *Nuclear News* **54** *(12)*, pp 40-42 (November 2011).

4. M. KAZIMI, E. Moniz, C. W. Forsberg, et. al., *The Future of the Nuclear Fuel Cycle*, Massachusetts Institute of Technology (2011).

5. OECD NUCLEAR ENERGY AGENCY, *Proc. International Conference and Dialogue on Reversibility and Retrievability in Planning Geological Repositories*, Reims, France (December 14-17, 2010)

6. INTERNATIONAL ATOMIC ENERGY AGENCY, *Consultants' Report on Meeting for Development of Technical Criteria for Termination of Safeguards for Material Categorized as Measured Discards*, STR-251 (Rev. 2), (March 1990).

7. C. W. FORSBERG and L.R. Dole, "Collocation and Integration of Reprocessing, Fabrication, and Repository Facilities to Reduce Closed Fuel Cycle Costs and Risks," Paper 10197, *Proc. of the International Congress on Advances in Nuclear Power Plants*, San Diego (June 13-17, 2010).

8. M. J. HAIRE, "Nuclear Fuel Reprocessing Costs," *Advances in Nuclear Fuel Management III, Hilton Head, South Carolina*, American Nuclear Society Topical Meeting (October 5-8, 2003).

9. M. J. HAIRE, G. L. Ritter, and R.E. Tomlinson, "The Economics of Reprocessing Alternative Nuclear Fuels," *National American Institute of Chemical Engineers Meeting*, San Francisco, California (November 25-29, 1979).

10. METROPOLITAN AIRPORTS COMMISSION, Minneapolis St. Paul International Airport, http://www.metroairports.org/mac/

Subcritical Advanced Burner Reactor (SABR) Fuel Cycles –

W. M. Stacey and B. Petrovic, Georgia Institute of Technology

SUBCRITICAL ADVANCED BURNER REACTOR (SABR) FUEL CYCLES

W. M. Stacey & B.,Petrovic, Georgia Tech

- SABR* is a subcritical burner SFR driven by a tokamak fusion neutron source based on ITER.
- SABR-2 fuel cycles envision the continued operation of LWRs supplemented by SABRs (in the power ratio 3/1**) that burn all the TRU produced in the LWRs.
- SABR-3 fuel cycles envision the gradual transition from a LWR fleet to a SFR fleet supplemented by SABRs that burn all the MA produced in both the LWRs and the SFRs.

*Nucl. Technol. 162, 53 (2008).. ** Proc. 11th OECD/NEA Info Exchg Mtg on Actinidie Partition & Transmutation, San Francisco (2010).

SABR-2metal
PWR-UOX TO SABR-METAL
2-STEP CONTINUOUS RECYCLE OPTION

- Stage 1—LEU oxide fuel irradiated in PWR until 50 GWd/t. DF is stored, then pyro-processed to separate RU, FP and TRU. TRU is sent to Stage 2, FPs are stored then sent to disposal site, and RU is sent to temporary storage for later use.
- Stage 2---TRU is fabricated into TRU-Zr metal fuel. The TRU-Zr fuel is irradiated to clad radiation damage limit (150-200dpa) in a SABR. DF is stored and pyro-processed, blended with fresh TRU from Stage 1, and recycled in a SABR. FPs are stored then sent to disposal site.

SABR-2 FLOWSHEET

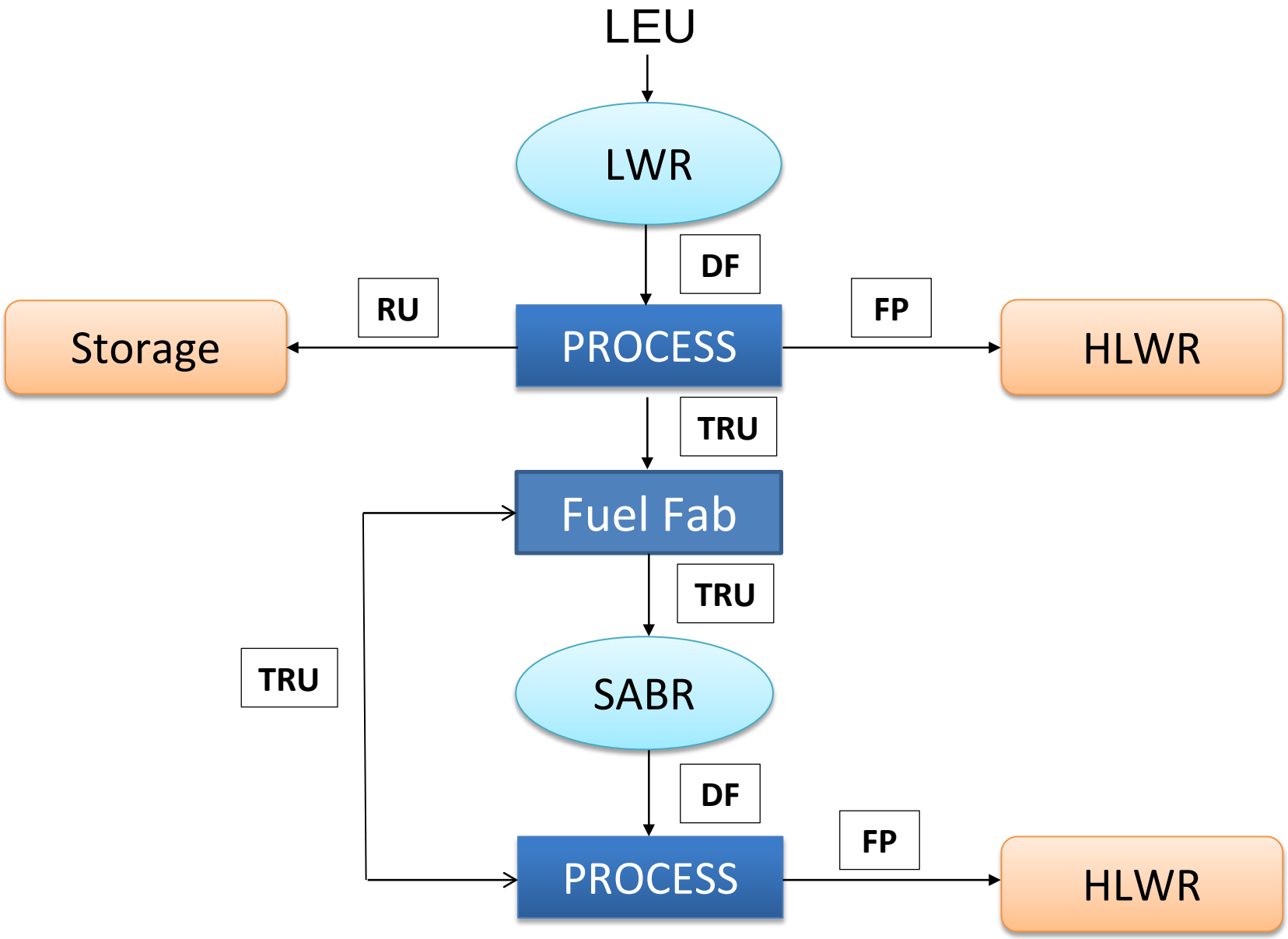

SABR-2oxide
PWR-UOX TO SABR-OXIDE
2-STEP CONTINUOUS RECYCLE OPTION

- Stage 1—LEU oxide fuel irradiated in PWR until 50 GWd/t. DF is stored, then processed to separate RU, FP and TRU. TRU is sent to Stage 2, FPs are stored then sent to disposal site, and RU is sent to temporary storage for later use.
- Stage 2---TRU is fabricated into TRU-oxide fuel. The TRU-oxide fuel is irradiated to clad radiation damage limit (150-200dpa) in a SABR. DF is stored and processed, blended with fresh TRU from Stage 1, and recycled in a SABR. FPs are stored, then sent to disposal site.

SABR-3metal
PWR-UOX TO TO CRITICAL SFR-METAL & TO SABR-METAL
3-STEP CONTINUOUS RECYCLE OPTION

- Stage 1—LEU oxide fuel irradiated in PWR until 50 GWd/t. DF is stored, then separated into RU, FP, HEPU* and MA+LEPU* . MA+LEPU is sent to Stage 3, FPs are stored then sent to disposal site, RU is sent to temporary storage for later use in Stage 2, and HEPU is sent to Stage 2.
- Stage 2—RU, fresh U and HEPU are fabricated into U+HEPU-Zr metal fuel for critical SFR. The U+HEPU-Zr fuel is irradiated to clad radiation damage limit (150-200dpa) in SFR. DF is stored and separated into RU, FP, HEPU and LEPU+MA. The HEPU is blended with fresh HEPU from Stage 1 and with U and recyled in SFR. FPs are stored then sent to disposal site, and the RU is sent to temporary storage for later use in Stage 2.
- Stage 3---MA+LEPU from Stages 1 and 2 is fabricated into MA+LEPU-Zr metal fuel for SABR. The MA+LEPU-Zr fuel is irradiated to clad radiation damage limit (150-200dpa) in SABR. DF is stored and separated into TRU, which is blended with MA+LEPU from Stages 1 and 2 and recycled in SABR, into FPs, which are stored then sent to disposal site.

 *HEPU =mostly Pu239, LEPU = remaining Pu, MA=minor actinides

SABR-3 FLOWSHEET

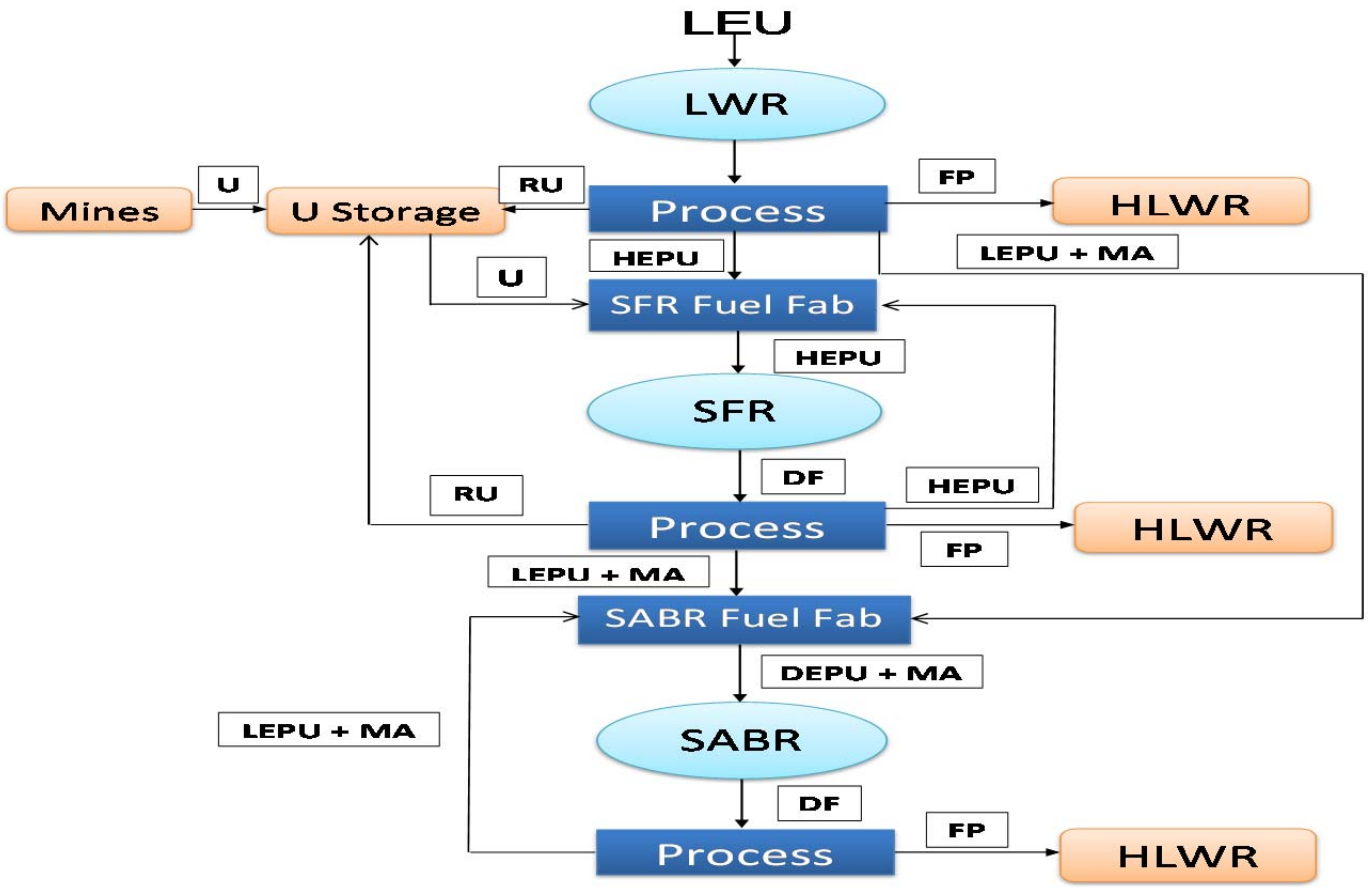

SABR-3oxide
PWR-UOX TO TO CRITICAL SFR-OXIDE & TO SABR-OXIDE
3-STEP CONTINUOUS RECYCLE OPTION

- Stage 1—LEU oxide fuel irradiated in PWR until 50 GWd/t. DF is stored, then separated into RU, FP, HEPU* and MA+LEPU* . MA+LEPU is sent to Stage 3, FPs are stored then sent to disposal site, RU is sent to temporary storage for later use in Stage 2, and HEPU is sent to Stage 2.
- Stage 2—RU, fresh U and HEPU are fabricated into U+HEPU oxide fuel for critical SFR. The U+HEPU-Zr fuel is irradiated to clad radiation damage limit (150-200dpa) in SFR. DF is stored and separated into RU, FP, HEPU and LEPU+MA. The HEPU is blended with fresh HEPU from Stage 1 and with U and recycled in SFR. FPs are stored then sent to disposal site, and the RU is sent to temporary storage for later use in Stage 2.
- Stage 3---MA+LEPU from Stages 1 and 2 is fabricated into MA+LEPU oxide fuel for SABR. The MA+LEPU-oxide fuel is irradiated to clad radiation damage limit (150-200dpa) in SABR. DF is stored and separated into TRU, which is blended with MA+LEPU from Stages 1 and 2 and recycled in SABR, and into FPs, which are stored then sent to disposal site.

 *HEPU =mostly Pu239, LEPU = remaining Pu, MA=minor actinides

Nuclear Fuel Cycle Options for the 2013 Evaluation and Screening by the USDOE NE – Sunil S. Chirayath, Nuclear Security Science and Policy Institute. Nuclear Engineering Department, Texas A&M University, College Station

WHITE PAPER

on

Nuclear Fuel Cycle Options for the 2013 Evaluation and Screening by the USDOE NE

Sunil S. Chirayath

Research Scientist, Nuclear Security Science and Policy Institute and
Visiting Assistant Professor, Nuclear Engineering Department
Texas A&M University, College Station, TX-77843-3473
sunilsc@tamu.edu

Introduction

The U.S. has only implemented part of a closed nuclear fuel cycle, the parts being uranium mining, milling, conversion, enrichment, fuel fabrication, power production (in light water reactors), and spent fuel storage. Disposal of spent fuel has not been implemented yet. If an open fuel cycle is finally selected as the option, then this spent fuel, after an interim storage period, has to be sent to a repository for final disposal. There are a number of concerns with the current and planned implementation of the U.S. fuel cycle, including spent fuel interim storage, proliferation, nuclear materials security, economics, safety, etc. Hence, the USDOE is exploring alternative fuel cycle options as part of the nuclear energy R&D roadmap report to Congress (April 2010), under the sustainable fuel cycles development plan. Towards this end the USDOE conducted an informational meeting on nuclear fuel cycle options at the Argonne National Laboratory on April 25, 2012, to invite meeting participants and interested parties to generate white papers on optional fuel cycle concepts. Accordingly, this white paper is being submitted for evaluation and screening by the USDOE.

Proposed Closed Fuel Cycle Option [Refer to Material Flow Diagram in Page-3]

The fuel cycle option proposed here has three stages, and all these stages will employ only standard USNRC licensed pressurized water reactors (PWR) and/or boiling water reactors (BWR) for electric power generation. An overview of the proposed fuel cycle concept is shown in the material flow diagram on page-3. Part of the Stage-1 (ST-1) presented here is the same as the open fuel cycle option currently is being practiced in the US. In addition to this part, spent fuel reprocessing through co-extraction is added as Separations and Waste Form Technologies (SWT-A). About 7 cores of discharged fuel assemblies from ST-1 LWRs will be required to fuel one ST-2 LWR core. Among the three product streams from SWT-A, plutonium and recovered uranium (Pu/RU) will be sent to Stage-2 (ST-2) to be recycled as MOX and the other two streams, (i) Minor Actinides (MA) and (ii) RU and fission product (FP) are separately send to Nuclear Waste Disposal Technologies for appropriate management.

In Stage-2 (ST-2), the reactors are operated using standard fuel assemblies (for example 17x17 fuel pin assembly) but with ~78% MOX fuel pins (driver fuel) and the remaining 22% ThO_2 pins (seed fuel). 25 pins in the assembly, as usual, are reserved for guide tubes (twenty

four) and instrumentation tube (one) locations. The source of MOX is the Stage-1 light water reactor (LWR) spent fuel. A few scoping computational studies were made by assuming a PWR which consists of 173 fuel assemblies and with a power production capacity of 1000MWe. The scoping studies showed a Pu-to-depleted-U ratio of about 0.10 in the MOX fuel pins. With no fissile material in the ThO_2 seed pins, this ratio allowed the reactor to be operated on a 14 months refueling cycle using a three-batch core refueling mode and achieving an average fuel discharge burnup of 45,000 MWD/t. ^{233}U buildup observed during the scoping study will be saved for operating LWRs proposed in Stage-3 (ST-3) by reprocessing the discharged ThO_2 rods employing the THOREX reprocessing process. The spent MOX fuel pins are reprocessed using co-extraction to recycle plutonium and RU again in ST-2 by appropriately replenishing plutonium and RU from ST-1. MA and FP from ST-2 are separately sent to nuclear waste disposal technologies for appropriate management.

In Stage-3 (ST-3), the reactors are again operated using standard fuel assemblies (for example 17x17 fuel pin assembly) but with all the 264 fuel pins containing ^{233}U-Th dioxide; the source of ^{233}U being spent fuel discharged from ST-2. No scoping studies were performed for this stage because of the excessive time required to determine optimal ^{233}U-to-thorium ratios required in each fuel pin. The spent ^{233}U-Th dioxide fuel pins are reprocessed using THOREX reprocessing to recycle ^{233}U-Th again in ST-3 by appropriately replenishing fissile material. MA and FP from ST-3 are separately sent to nuclear waste disposal technologies for appropriate management.

Highlights

(1) Plutonium and depleted uranium contained in spent fuel from the current fleet of US LWRs will be recycled in Stage-2 reactors as MOX fuel. Co-extraction of plutonium and uranium for reprocessing is proposed.
(2) Thorium utilization along with MOX from Stage-1 reactors is planned in Stage-2 and Stage-3 reactors. No three-stream reprocessing of Th-Pu-U is needed because thoria rods and MOX fuel rods are physically different.
(3) THOREX or an equivalent spent fuel reprocessing methodology is needed.
(4) Uranium mining is reduced because of MOX recycling and thorium utilization.
(5) No fast reactors or accelerator driven system is necessary.
(6) MA has to be disposed of in a long term repository.
(7) FP has to be disposed of in a short term repository.

Material Flow Diagram

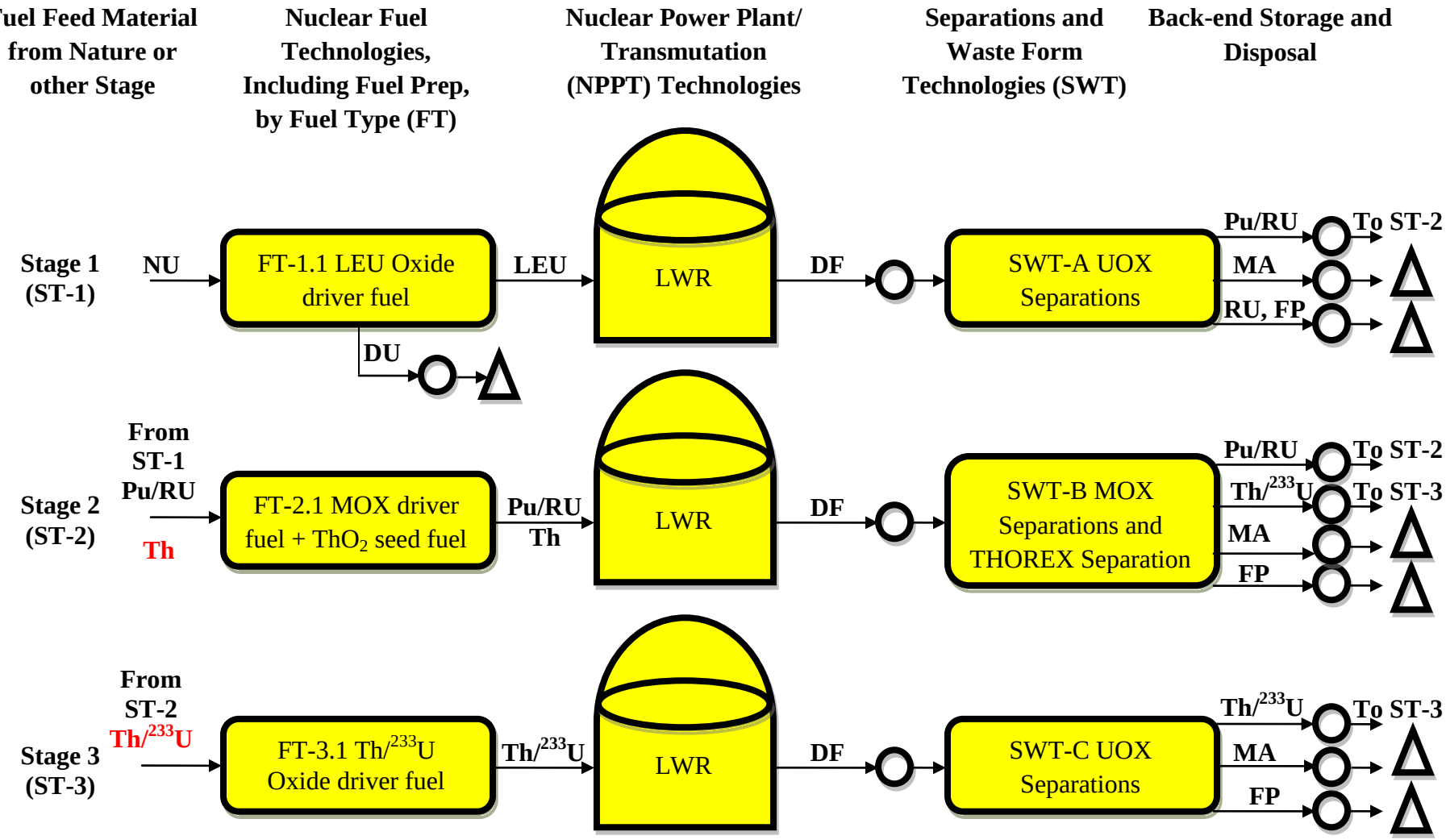

Note: Only primary material flows are shown. Material flows from imperfect separations (losses), Low-Level-Waste (LLW), and other secondary streams that will be produced in performing various fuel cycle functions are not shown.

Legend:

NU = Natural Uranium
DU = Depleted Uranium
LEU = Low-Enriched Uranium
RU = Recovered Uranium
DF = Discharged Fuel
FP = Fission Products
TRU= Transuranics
MA = Minor Actinides
LWR = Light Water Reactor
SFR = Sodium-cooled Fast Reactor
MOX = Mixed Oxide
UOX = Uranium Oxide
= Nuclear Waste Disposal Technologies
= Nuclear Material Storage Technologies
= Nuclear Material Transport Technologies
THOREX= Thorium-^{233}U Separations

Nuclear Fuel Cycle Option Submission – Accelerator-Driven Subcritical System for Spent Fuel Amelioration without Reprocessing –

Mark Pierson, Ph.D., Virginia Tech, Mechanical Engineering Department, Nuclear Engineering Program

Nuclear Fuel Cycle Option Submission – Accelerator-Driven Subcritical System for Spent Fuel Amelioration without Reprocessing

Point of Contact:
Mark Pierson, Ph.D., Associate Professor
Virginia Tech, Mechanical Engineering Department, Nuclear Engineering Program
(540) 231-9112
mark.pierson@vt.edu

Description of Concept

This fuel cycle will use the current standard low-enriched uranium front-end fuel cycle, a light water reactor with fuel burnup of about 50 MWd/kg, with subsequent fuel storage and cooling following fuel assembly removal. The main difference for this fuel cycle option is the back-end of the cycle. The back-end would entail multiple cycles through a liquid-fueled accelerator-driven subcritical (ADS) system which would burn light-water reactor spent fuel while making electricity for the grid. The ADS will convert U-238 in the spent fuel to Pu-239 and then burnup plutonium and other fissile isotopes (including remaining U-235). In addition, other transuranic isotopes would be transmuted either to fissile isotopes or to shorter-lived isotopes. The liquid fuel can be passed through such an ADS system several times to further reduce the long-lived isotopic concentrations while continuing to produce electricity. It is estimated that as much electricity can be produced on the first pass through the ADS system as was produced originally by the LWR system for a similar or lower cost per MWd. More details of this system follow.

Following an appropriate cooling period of about several years, LWR spent fuel would be transported to the site of the ADS system where pre-processing of the spent fuel will take place. Pre-processing will involve decladding the spent fuel and then liquefying it. Liquid fuel type could be molten salt such as the FLiBe used in the ORNL Molten Salt Reactor Experiment or it could be a lead-bismuth formulation such as that studied at ARL. The liquid fuel is then added in a feed and bleed mode to the ADS system. After an initial buildup period of isotope concentrations the fuel will achieve an equilibrated state where all the isotopes are in their equilibrium concentration, i.e., the fuel addition rate equals the burnup rate. For a given feed and bleed rate the liquid fuel will reach an equilibrium state and then never change isotope concentration based on a constant burnup rate from the accelerator-driven neutron spallation source. The bleed fuel can then be used as the starter fuel for remaining systems. A recirculation pump circulates the fuel through the ADS core and primary heat exchanger at a very high rate compared to the feed and bleed rate.

The advantage of a liquid fuel is that one does not need to worry about different neutron flux profiles throughout the subcritical reactor and different fuel burnup because the fuel will evenly remix when it leaves and goes back into the reactor. The liquid fuel is also not susceptible to thermal shock from unplanned accelerator beam trips. Finally, solid fuel qualification will take decades for approval whereas the fuel is liquid in this case. The ADS can rely either on a fast neutron spectrum for burnup or an epithermal or thermal neutron spectrum can be evaluated. There are parties that argue for fast or for thermal spectrums. This aspect would need to be fleshed out more. Heat is removed from the ADS system to power an electrical generation balance of plant using either a Brayton cycle or conventional Rankine cycle.

Once, the liquid LWR spent fuel has made one pass through an ADS #1 system, it can then make a second pass through an ADS #2 system that has a more powerful accelerator producing a higher neutron flux to make up for more poisons in the feed fuel. Because the first pass will take decades, by the time an ADS #2 system is needed, accelerator costs should come down to make a more powerful accelerator at lower cost than the first accelerator. This could continue for potentially a third cycle each time using a higher power accelerator. After the final pass, the remaining fission products are packaged as waste and disposed of in a geologic repository. The advantage of multiple passes is that it can defer the requirement for a geologic repository for at least a half- century if not a full century.

Material Flow Diagram

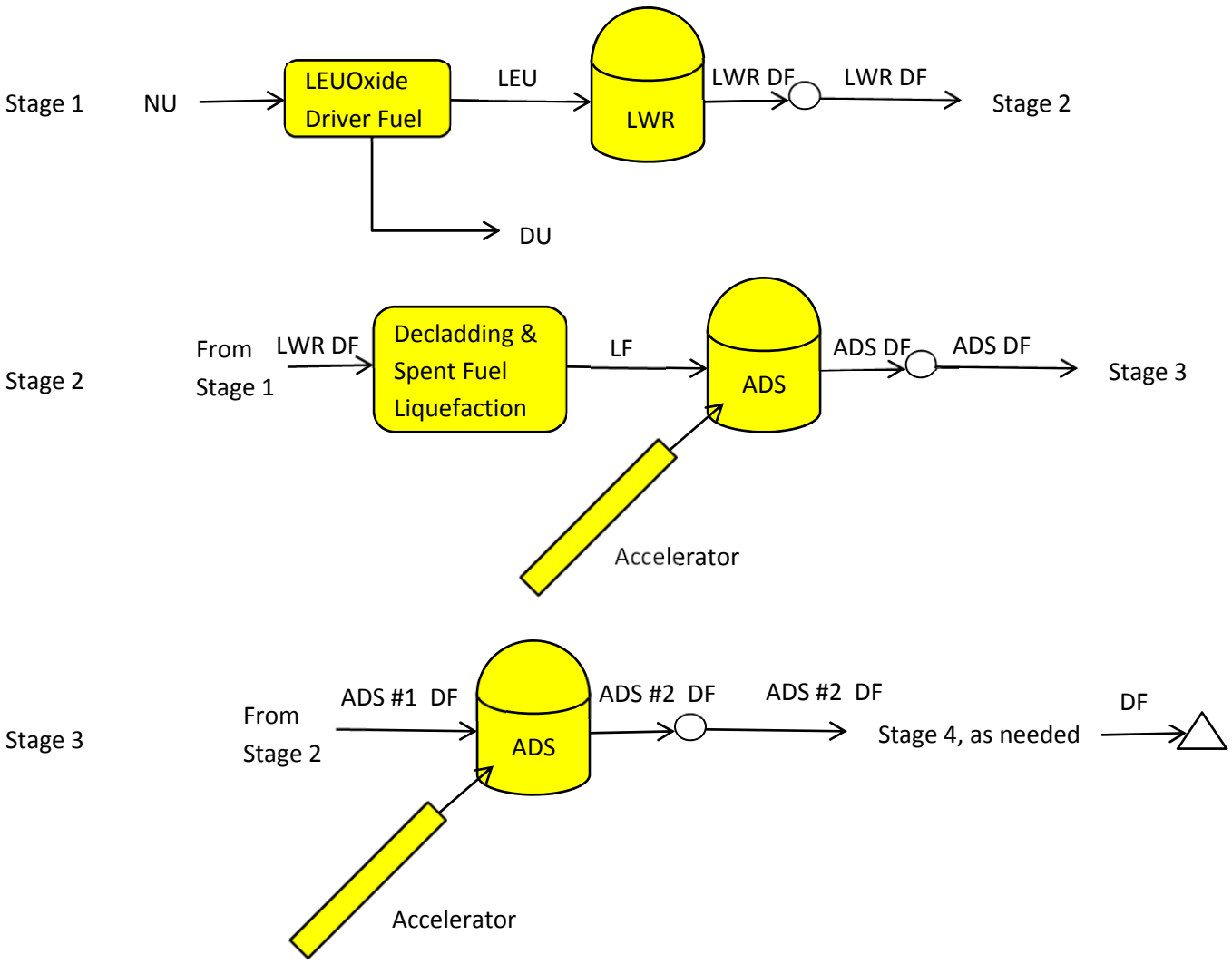

LWR(LEU) to FR(TRU/Th)* to BRX(U-233/Th)

*with or without LWR(Pu/Th)

– Westinghouse Electric Co.

System Datasheet

Summary Description

Fuel Cycle Option No.		**Prepared by**	Westinghouse Electric Co.
Roadmap Strategy	Full Recycle	**Preparation Date**	5/21/2012
Recycle Strategy	Continuous Recycle	**Revision No.**	1
Fuel Cycle Option Title	LWR(LEU) to FR(TRU/Th)* to BRX(U-233/Th) *with or without LWR(Pu/Th)		
High-level Objectives	Reduce accumulating inventories of LWR used nuclear fuel. Minimize TRU content in nuclear waste (via transmutation and use of thorium). Enhance resource sustainability (via recycle of TRU, potential use of thorium, and break-even or breeder reactors). Improve public acceptance. Improve safety coefficients of TRU-bearing U fuel with potential use of Th. Long-term fuel cycle with very low inventory of higher actinides (Am, Cm, Cf) .		

No. of Stages 2/3 (or more with variants)	**Stage Description**
Stage 1: PWR(LEU)	LEU oxide fuel is irradiated in PWRs until burnup of 50 GWd/t. Discharge fuel (DF) is cooled in on-site spent fuel storage and sent to reprocessing facility. Recovered transuranics (TRU) are used in Stage 2. Recovered uranium (RU) and depleted uranium (DU) are temporarily stored and then disposed but alternative routes are contemplated (such as RU re-enrichment and use in LWRs or HWRs – see variants below). Fission products (FPs) are stored to reduce decay heat and disposed.
Stage 2: RMLWR (or FR) with Th-TRU Fuel and Continuous Recycle	Recovered TRU from Stage 1 is used to make Th-TRU fuel. The fuel is inserted into burner (CR<1) RMLWR (BWR with PWR as variant or in conjunction) and irradiated. Discharged fuel is stored in on-site spent fuel storage and sent to reprocessing. Recovered actinides are recycled back into Stage 2. To reduce Am+Cm+Cf generation and/or improve fuel cycle flexibility and/or reactor performance, use of Fast Reactors is also contemplated in addition or alternative to RMLWR. Heterogeneous recycle of Am/Cm into targets is also considered as an alternative to the homogeneous recycle (see variants below). Recovered U-233 is used in Stage 2, or may be used into Stage 3 to accelerate TRU consumption (see variants of this fuel cycle option below). FPs are stored to reduce decay heat and disposed.
Stage 3: BRX(^{233}U-Th closed cycle)	U-233/Th MOX fuel is fabricated and irradiated in break-even or breeder reactors (BRX with CR$\geq$1). The BRX could be a FR or a thermal reactor or a proper combination of the two (see variants below).

Possible Variants:

1. Introduce intermediate stage between Stage 1 and Stage 2 with Th-Pu or Th-TRU recycle in LWR (similar to current U-MOX). Load reprocessed discharged fuel from this intermediate stage into Stage 2 RMLWR or FR.
2. Use reduced moderation - and/or fast-spectrum reactors to provide flexibility
3. Re-enrich RU for use in LWRs in Stage 1 or use RU in HWRs as an auxiliary stage.
4. Use heterogeneous recycle rather than homogeneous recycle of Am/Cm
5. Transition oxide to nitride enriched in N-15 for Stage 3.
6. Apply burning scheme to TRU recovered from BWR used fuel in addition to PWR used fuel.
7. Apply to legacy LWR used fuel with lower burnups
8. Partition in-bred U from Th-TRU fuel in Stage 2 to expedite TRU legacy consumption and use to begin transition to Th-U closed cycle in Stage 3.
9. Use natural/depleted U instead of Th in Stage 2 and/or 3(i.e. without introducing Th)

Disposal Environment	Disposal environment with potentially reduced requirements for engineered barriers such as shorter required isolation time due to the reduced radiotoxicity of waste.

Narrative

There is no economic driver for the US nuclear industry to change its operational model from the current once-through cycle which relies on proven industrial technologies and has achieved minimum cost of fuel, facilities and operation. In order for alternative cycles to be successful, a compelling goal that can override the short-term economic costs and technological risks must be made. Since one of the everlasting problems faced by the nuclear industry is the adverse perception from large part of the public, the development of a fuel cycle that can restore the public's (and investors') confidence in nuclear energy is essential to keep and possibly expand nuclear energy use in the US. The key areas to achieve this objective are safety and nuclear waste management, which economics and technical viability as the overarching criteria to screen the myriad of possible alternatives. Improved safety can be achieved through better fuel and cladding materials and reasonable design improvements which do not forgo fuel cycle cost and economics.

The other key aspect for public acceptance is to implement a permanent and consensual solution for the nuclear waste management. The general public cannot be convinced with purely technical considerations that used nuclear fuel can be safely disposed by segregating it from the biosphere for geologic times. We may be able to convince a local community and site a repository but the public at large would remain skeptic that nuclear energy is ultimately safe if the inventory of long-lasting radioactive nuclear waste continue to pile up.

For improving public confidence we suggest a coordinated effort on the fuel cycle to achieve a nuclear waste with reduced long-term disposal requirements (Westinghouse has suggested a "300-year" radiotoxicity equivalent to natural U ore as a tentative metrics). This can be obtained by continuous recycling and burning of the transuranic (legacy and newly produced) contained in the spent LWR fuel. Proven LWR reactor and wet separation technologies, and when practical existing foreign reprocessing facilities, should be relied upon to achieve reasonable economics, reduce the technological risks and shorten the time to deployment. Ideally, a portion of the current LWR fleet could be retrofit to handle TRU-containing fuel and contribute to the TRU burning mission, once the transmutation fuel is qualified. A manufacturing and reprocessing technology compatible with LWR fuel and the industrial amounts of fuel to be handled must be used or developed. The development of FRs should be pursued because of their strategic importance but their deployment schedule should be compatible with the time and investments required before the FR technology matures and becomes economically competitive with the LWR technology. The costs to implement a "300-year" waste will certainly be higher than the current once-through cycle but at least the objective, public acceptance, will be worthwhile pursuing and could have durable benefits.

The general framework proposed by Westinghouse to obtain a "300-year" waste is shown in Fig. 1. The supporting reprocessing and fuel manufacturing technologies are depicted in Fig. 2. The strategy to achieve the objective is to move from the current once-through cycle to a full, continuous, actinide recycle. The nuclear system consists of different stages and associated reactors and technologies (fuel separation and manufacturing) with the intent of a gradual evolution from the current technologies.

The first stage consists of current once-through LWRs operating on LEU fuel and generating TRU in the UNF. The Used Nuclear Fuel (UNF) discharged from this stage, which includes the legacy UNF from past operation, is reprocessed after a period of interim storage allowing for adequate cooling. Aqueous reprocessing process with separation and recovery of RU, Pu and further precipitation and recovery of MA (Am, Cm etc.) is envisaged (see also Fig. 2).

The reactors in the second stage have a CR< 1 to enable burning the supply of TRU contained in the Used Nuclear Fuel (UNF). They should also have the capability to operate on, or being transitioned to, full, continuous recycle of actinides to avoid the accumulation of a specific long-term radiotoxic legacy from this Stage. We indicated Reduced Moderation LWRs as the potential first-generation reactors for this stage. RMLWRs, and RMBWRs in particular, have the potential for continuous recycle and by relying on LWR technology and being able to leverage on current LWR designs they represent a practical evolutionary step from the Stage 1 reactors. Conceivably, some of the Stage 2 reactors can be retrofitted from Stage 1 reactor by thus keeping the novel features at a minimum (mainly in the area of core/fuel design) and optimizing the time and deployment cost. FRs could complement and eventually replace RMLWRs in Stage 2 to facilitate and expand the transmutation mission, such as by extending the range of CRs, increasing fuel burnup and reducing reprocessing requirements, reducing the generation of higher actinides in the recycled fuel, etc. Should this become of future interest, the scheme proposed has the flexibility to be transitioned to a closed fuel cycle by transition to Stage 3 reactors with breakeven cores (replacing Stage 1 reactors).

While the proposed framework can enable to attain 300-year waste also with the uranium fuel cycle, consideration should be given to the gradual introduction of a thorium fuel cycle. Thorium has many potential benefits which make it attractive for TRU burning in Stage 2 reactors as well as long-term sustainability. Of particular relevance are the low TRU CR, low endogenous generation of higher actinides, better thermo-physical properties with respect to the counterpart U fuel and general improvement in safety feedbacks (especially voids) that are typically a concern in multi-recycled U-TRU fuel. Additionally, thorium has the flexibility to enable the transition to a Stage 3 sustainable cycle across a broad range of reactor types and spectral conditions. The fuel composition in a thorium closed cycle features very low contents of Am and higher actinides, thus mitigating the associated issues on separation and fuel manufacturing; its actinide inventory is characterized by a relatively beneficial trend in radiotoxicity and heat load which overall is potentially advantageous with respect to the uranium closed cycle. There will be however technical challenges and inevitable costs associated to the development and implementation of thorium, which need proper evaluation and reconsideration during its actual implementation. One major challenge (and cost) is the need for remote manufacturing of industrial amounts of fuel to cope with the highly penetrating gammas from the decay daughters of U-232 (this is a requirement also for the U-TRU transmutation fuel even though the shielding requirements may be reduced especially in a fast spectrum). Another technical challenge is the development of a reprocessing flowsheet for Th-TRU irradiated fuel (the one proposed in Fig. 2 appears reasonable but will require testing to be proven viable). One shortcoming could be represented by the lower breeding gain with respect to uranium in the fast spectrum. This however does not appear a concern in the current and foreseeable future and if proven such hybrid thorium-uranium cycles are certainly possible. Overall the potential benefits of introducing thorium for TRU transmutation and public acceptance appear sensible and worthwhile further exploratory studies and experiments.

Possible variants to the proposed scheme are described in the summary Table and consist of:

1) Introducing intermediate stage between Stage 1 and Stage 2 with Th-Pu or Th-TRU recycle in LWR (similar to current U-MOX). Load reprocessed discharged fuel from this intermediate stage into Stage 2 FR.

2) Partition U-233 out of reprocessed Th-TRU-U3 fuel from Stage 2 to expedite TRU legacy consumption and begin transition to Stage 3 Th-U3 breakeven reactors. This would require reprocessing with actinide partition of the irradiated thorium fuel, differently from what we indicated in Fig. 2.

3) Re-enrich RU for use in LWRs in Stage 1 or use RU in HWRs as an auxiliary stage.

4) Use heterogeneous recycle rather than homogeneous recycle of MA.

5) Transition from oxide fuel to nitride fuel with N enriched in N-15 in Stage 3 (and 2)

6) Evaluate performance with natural or depleted U instead of Th feed in stage 2 and/or 3.

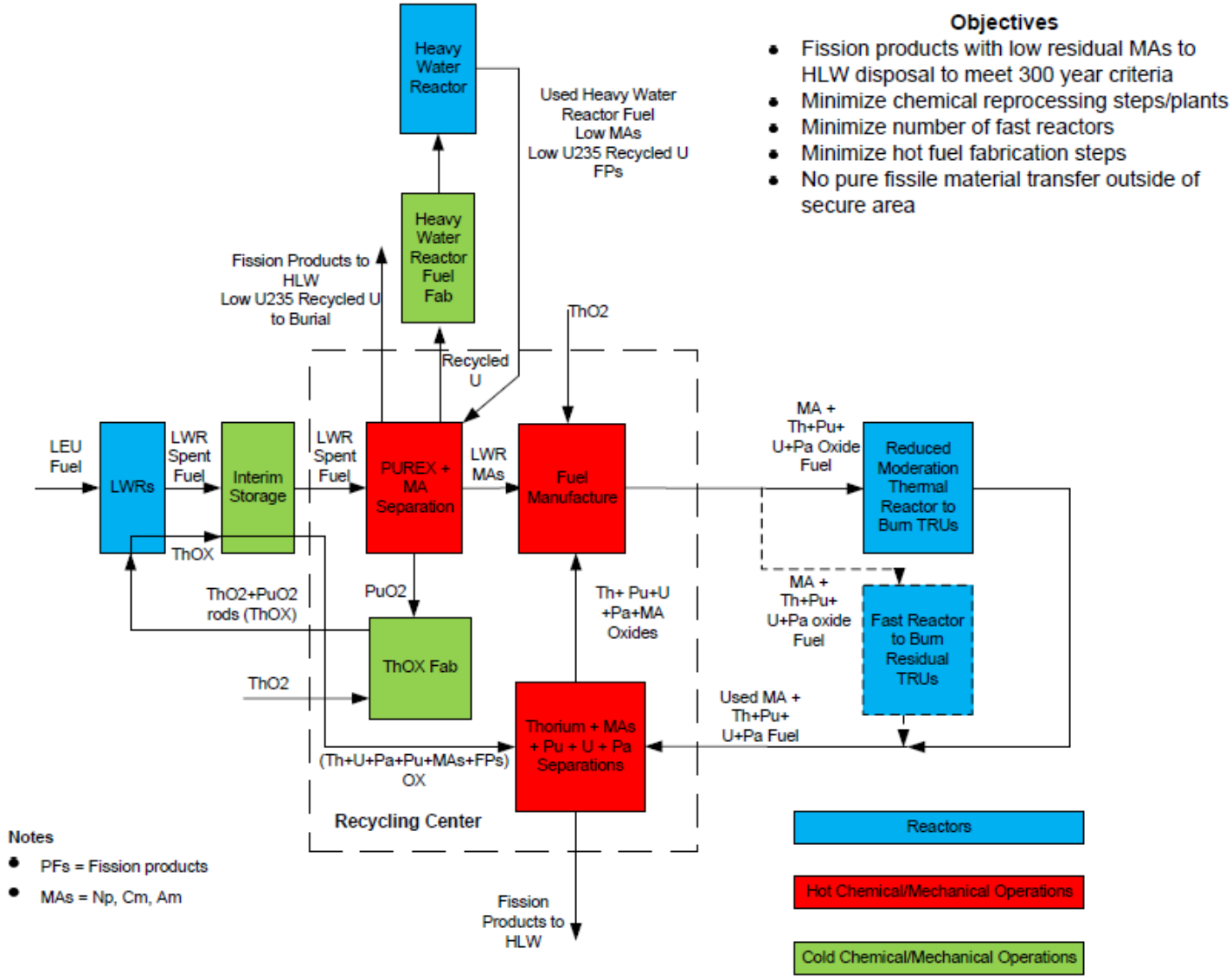

Figure 1 – Material Flow and Main Facilities to Support “300-year” Waste

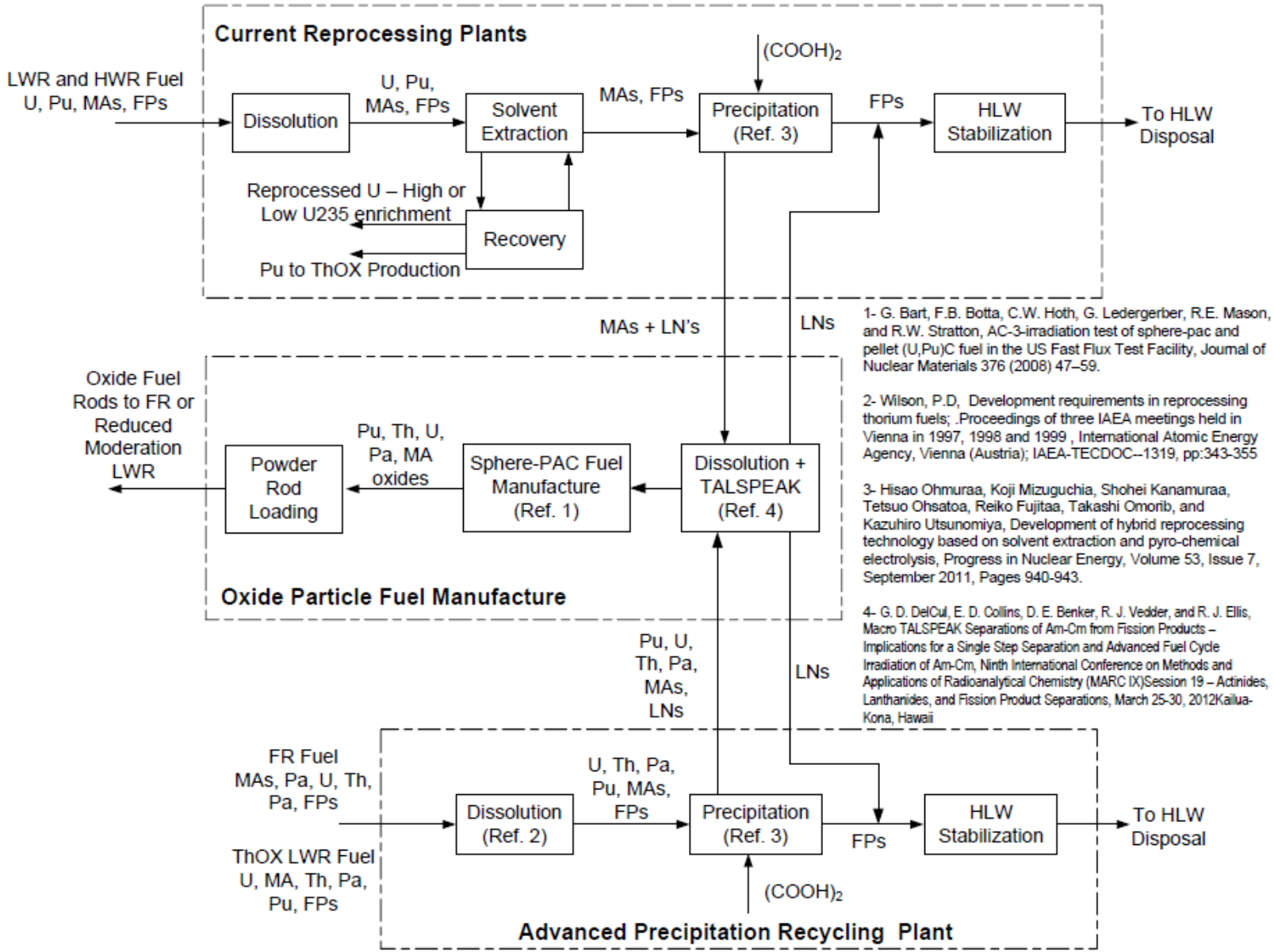

1- G. Bart, F.B. Botta, C.W. Hoth, G. Ledergerber, R.E. Mason, and R.W. Stratton, AC-3-irradiation test of sphere-pac and pellet (U,Pu)C fuel in the US Fast Flux Test Facility, Journal of Nuclear Materials 376 (2008) 47–59.

2- Wilson, P.D, Development requirements in reprocessing thorium fuels; .Proceedings of three IAEA meetings held in Vienna in 1997, 1998 and 1999 , International Atomic Energy Agency, Vienna (Austria); IAEA-TECDOC--1319, pp:343-355

3- Hisao Ohmuraa, Koji Mizuguchia, Shohei Kanamuraa, Tetsuo Ohsatoa, Reiko Fujitaa, Takashi Omorib, and Kazuhiro Utsunomiya, Development of hybrid reprocessing technology based on solvent extraction and pyro-chemical electrolysis, Progress in Nuclear Energy, Volume 53, Issue 7, September 2011, Pages 940-943.

4- G. D. DelCul, E. D. Collins, D. E. Benker, R. J. Vedder, and R. J. Ellis, Macro TALSPEAK Separations of Am-Cm from Fission Products – Implications for a Single Step Separation and Advanced Fuel Cycle Irradiation of Am-Cm, Ninth International Conference on Methods and Applications of Radioanalytical Chemistry (MARC IX)Session 19 – Actinides, Lanthanides, and Fission Product Separations, March 25-30, 2012Kailua-Kona, Hawaii

Figure 2 –Supporting Reprocessing and Fuel Manufacturing Technologies

Material Flow Diagram – Refer to Fig. 1
(Reference Case Shown- Variants not Included, Stage 3 with CR>=1 not shown) –

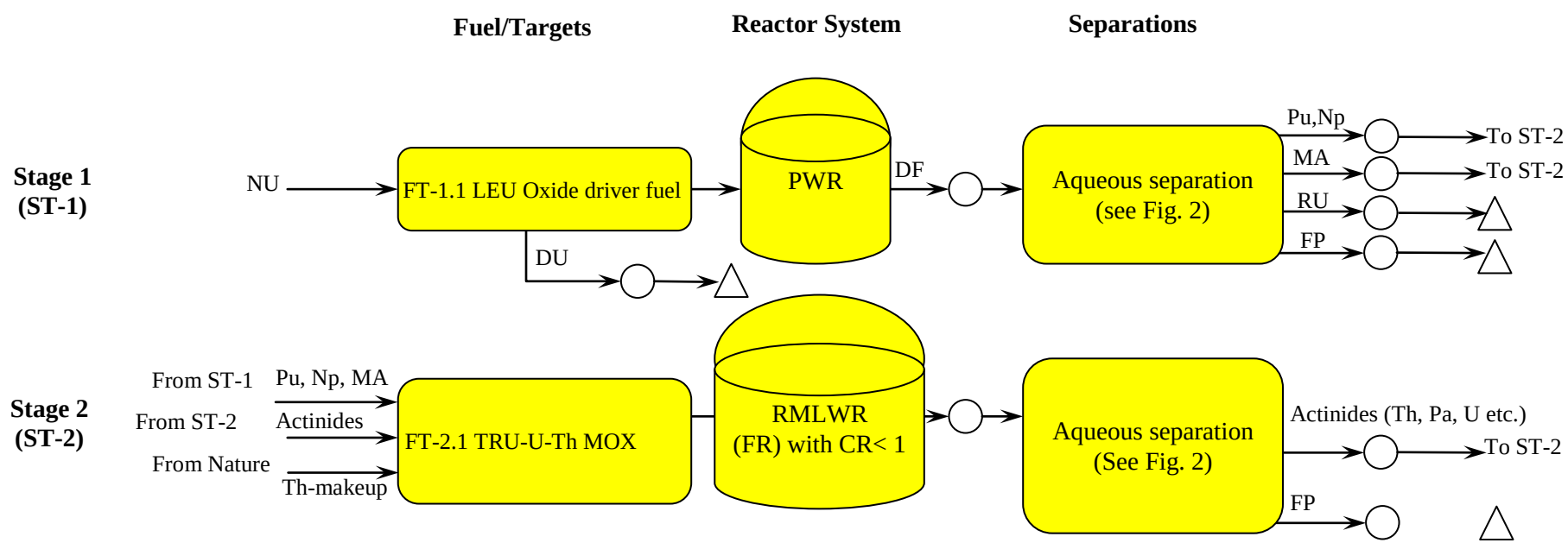

Note: Refer to Fig. 1,2, and text/summary table for more details and various variants.

Note: Low-Level Waste (LLW) will be produced in performing various fuel cycle functions.

Legend:

NU = Natural Uranium	DF = Discharged Fuel	PWR = Pressurized Water Reactor	△ = Disposal
DU = Depleted Uranium	FP = Fission Products	FR = Fast-spectrum Reactor	○ = Storage
LEU = Low-enriched Uranium	TRU = Transuranics	MOX = Mixed Oxide	→ = Transport
RU = Recovered Uranium	MA = Minor Actinides		
U3 = U-233 (primarily)			

EPRI Response to DOE-NE Invitation for Comments on Nuclear Fuel Cycle Options – Andrew Sowder, EPRI

31 May 2012

EPRI Response to DOE-NE Invitation for Comments on Nuclear Fuel Cycle Options

Prepared by Andrew Sowder, Senior Project Manager, EPRI

The U.S. Department of Energy's Office of Nuclear Energy invited participants at its Informational Meeting on Nuclear Fuel Cycle Options, hosted at Argonne National Laboratory on April 25th, 2012, to submit fuel cycle option concepts. EPRI as a 501(c)3 corporation does not advocate for policy-related actions. As an independent research institute chartered to support the safe, reliable, and affordable generation of electricity for the public good, EPRI does provide comments on specific technical issues, impacts of potential policy decisions, and remaining uncertainties or research needs.

Perspective on and Criteria for Prioritizing Fuel Cycle Research Efforts

The comments presented here are derived from EPRI's four decades of research, development, and demonstration (RD&D) work on advanced nuclear fuel cycle technology,[1] including early programs on testing of mixed-oxide (MOX) fuel for use in light-water reactors (LWRs), and reflect testimony provided in 2010 and 2011 to the Blue Ribbon Commission on America's Nuclear Future (BRC) on criteria for choosing promising technology paths to a sustainable nuclear fuel cycle, which are relevant to the April 2012 DOE-NE request.[2] Accordingly, before commenting on promising fuel cycle options, it is worth restating the EPRI perspective and derivative criteria for choosing a fuel cycle pathway worth pursuing in the U.S. over many decades on the way to commercial scale deployment.

- First, options should focus on safe, reliable, cost-competitive <u>electric power generation.</u> Meeting growing demand for clean, affordable, reliable electric power throughout the world is the primary reason for the pursuit of new nuclear technologies and responsible expansion of generation capacity. This perspective follows from EPRI's core mission tied to electric power generation and delivery.
- Second, better utilization of natural resources is *desirable* and may be needed depending on new resource identification and nuclear growth, recognizing that uranium resources are not limiting for near-term fuel cycle decisions. Accordingly, the once-through fuel cycle using current LWR technology is likely to represent the most economic option for much of the 21st century.
- Success will depend on keeping any fuel cycle option as simple as possible – keeping in mind that some entity has to build, maintain, and safely operate the facilities in question in order to provide reliable, affordable power generation. This is particularly the case for commercial deployment. Regardless, much RD&D will be needed to transition from the current technology to a new technology platform. Commitments to such technologies, and the accompanying technical leadership role, require investment of resources and steady focus on the desired endpoints.

---

[1] For example: *An Evaluation of the Concept of Transuranic Burning Using Liquid Metal Reactors*. Electric Power Research Institute, Palo Alto, CA: 1991. NP-7261, and *Advanced Nuclear Fuel Cycles – Main Challenges and Strategic Choices*. Electric Power Research Institute, Palo Alto, CA: 2010. 1020307

[2] A. Sowder. *Challenges and Strategic Choices for a Sustainable Nuclear Fuel Cycle*. EPRI presentation to the Blue Ribbon Commission on America's Nuclear Future, Subcommittee on Reactors and Fuel Cycle Technology, Washington, D.C., October 12, 2010.

- Externalities such as waste management, security, and non-proliferation challenges can and must be appropriately addressed in a safe but reasonable manner for all fuel cycle options. Hence, these factors are not useful discriminators between alternative advanced fuel cycle technologies.

EPRI concurs with the cogent BRC observation, "In fact, safety, economics, and energy security are likely to be more important drivers of future fuel cycle decisions than waste management concerns per se."[3] EPRI suggests that this observation embodies a useful organizing principle for defining a vision and identifying promising technology pathways for DOE's long-term RD&D program in the U.S. for maturing and deploying advanced fuel cycle technologies at the scale and time needed by focusing on the primary mission of safe, reliable, affordable energy production with better natural resource utilization.

While many fuel cycle options are on the table, most represent dramatic departures or "leaps" from the current technology. And while such revolutionary technologies are attractive and may warrant some RD&D investment as part of a diversified national energy research portfolio, "performance on paper" cannot be relied upon for deployment at the scales and on the timeframes needed. Therefore, an evolutionary, phased approach appears more prudent as the core of a national energy RD&D strategy than a revolutionary one. Likewise, successful deployment of the needed fuel cycle infrastructure on a reasonable timeframe and at realistic costs is best served by building on existing, proven technologies and evolving to more advanced breakthrough technologies.

A common theme related to fuel cycle decision-making has emerged in recent studies[3,4], *i.e.*, that of "preserving options". This, however, is no simple or passive endeavor, particularly if the intent is to really have those options available when needed and at the scale needed. In order to truly "keep options open" in the future, those options need to be identified and defined today, and appropriate RD&D efforts supporting those desired options must be pursued on an appropriate timeline.

Leading Candidate Fuel Cycle Technology

In light of these criteria and principles, EPRI suggests that the leading candidate technology is a liquid-cooled fast neutron spectrum reactor operating at a conversion ratio close to one, possibly initially on enriched uranium, but progressively transitioning to the uranium-plutonium fuel cycle (Figure 1). This technology is targeted toward the primary goal of sustainable electricity generation through an evolutionary approach that builds upon, and indeed maximizes the use of, the current and expanding LWR fleet deployed worldwide and fuel cycle infrastructure (e.g., reprocessing and fuel fabrication facilities).

There are many configurations (pool vs. loop), and coolants (liquid metals, molten salts), and EPRI does not specifically endorse one specific technology or approach over another EXCEPT from the standpoint of practicality, simplicity, and technology readiness. EPRI notes that a significant number of sodium-

[3] *Blue Ribbon Commission on America's Nuclear Future - Report to the Secretary of Energy*. Blue Ribbon Commission on America's Nuclear Future, Washington, D.C., January 26, 2012.
[4] *The Future of the Nuclear Fuel Cycle*. Massachusetts Institute of Technology, 2011.

cooled fast reactors have been built and demonstrated at all scales, from research to industrial.[5] Further to this point, EPRI refers to a similar conclusion from a 2009 Idaho National Laboratory report:[6]

> The SFR [sodium-cooled fast reactor] is the most mature fast technology that has been used for test and demonstration scale reactors internationally (some of which are power producers like the Russian BN-600). This was a primary reason why the advanced recycling (or burner) reactor being considered under the AFCI and GNEP program assumed sodium as the coolant.

While many challenges remain for sodium-cooled fast reactor technology, especially with respect to safety, reliability, and ease of inspection and maintenance, these are likely to be surmountable with incremental, phased improvements within the appropriate timescale, i.e., 50-years.

There are also a number of additional missions that a fast reactor technology, once-mature, could support, such as minor actinide burning. While such options are clearly desirable, they should not initially distract from or complicate the core mission, i.e., sustainable energy generation. Adequate geologic disposal for LWR spent fuel and HLW will be eventually needed regardless of any realistic fuel cycle evolution/revolution. Furthermore, leaving actinides in the waste stream does not have a major impact on the long-term safety of an adequate deep geologic repository system.[7]

From the EPRI perspective, a rational energy RD&D program for the U.S. should focus on the safe, reliable, competitive, and efficient production of energy. In the short- to medium-term, light water reactors will remain the dominant and most economic means of electricity production from nuclear energy. In the long-term, however, while many options exist, the resources to purse them all do not. Accordingly, a reasonable, pragmatic RD&D portfolio should be centered on a technology path that maximizes likelihood for successful deployment at the scale and on the timeframe needed by pursuing an evolutionary, phased approach. The evolutionary transition from open fuel cycles to (partially) closed fuel cycles suggests a balanced, complementary nuclear energy system that relies on the existing and future LWR fleet in concert with the progressive introduction of an increasing number of fast reactors operating in the near-breeding mode (Figure 2)[8], with emphasis on the most advanced reactor technology to date. The latter includes sodium-cooled reactors for which substantial operating experience and infrastructure already exists. Other, more revolutionary technologies may also warrant continued R&D investment on a scale commensurate with their potential downstream benefits balanced against technological uncertainty and risk. However, such investment should not come at the expense of weakening progress on advancing a fast reactor technology to the commercial scale.

---

[5] *Fast Neutron Reactors*. World Nuclear Association, London. November 2011, <http://www.world-nuclear.org/info/inf98.html> Accessed January 2012.

[6] R. Wigeland, T. Taiwo, M. Todosow, W. Halsey, and J. Gehin. *AFCI Options Study*, Idaho National Laboratory, Advanced Fuel Cycle Initiative, September 2009. INL/EXT-10-17639.

[7] J. Kessler, M. Apted, M. Kozak, M. Nutt A. Sowder, P. Swift. *Radiotoxicity Index: An Inappropriate Discriminator for Advanced Fuel Cycle Technology Selection* (12276). Waste Management 2012 Conference Proceedings. February 26 – March 1, 2012, Phoenix, AZ.

[8] This fuel cycle option is similar to the 3-Stage Continuous Recycle Option (PWR-UOX to PWR-MOX to SFR) presented at the the 25 April 2012 DOE-NE Meeting on Nuclear Fuel Cycle Options (T. Taiwo, *Examples of Fuel Cycle Options*, Argonne National Laboratory) <u>without</u> emphasis on minor actinide recycle.

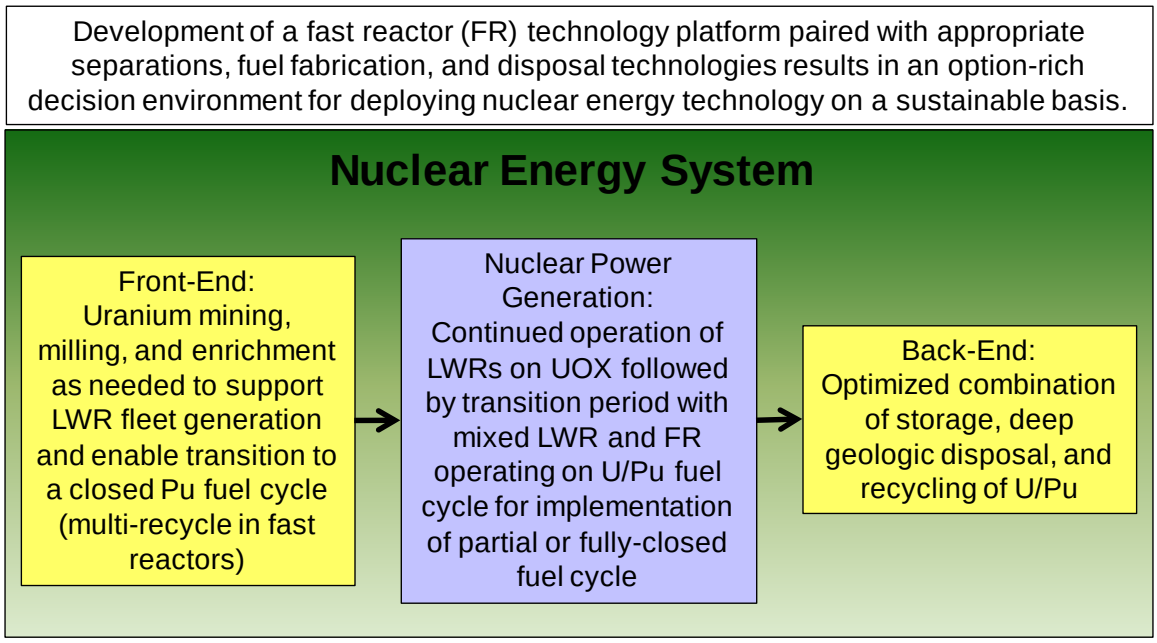

•Fuel cycle: uranium and plutonium
•Reactor technology: blend of LWRs and FRs
•Fuel composition: UOX and MOX LWR fuel, MOX or Pu-metal in FRs
•Reprocessing technology: aqueous reprocessing for oxide fuel; pyroprocessing for metal fuel
•Disposal: Deep geologic disposal (mined and optional addition of boreholes for niche wastes) for some spent fuel, HLW from reprocessing incl. separated minor actinides

Figure 1. Basic conceptual representation of a target nuclear energy system for achieving a strategic goal of increasing sustainability of electricity generation through the evolutionary introduction of fast reactors in the nuclear energy system mix.

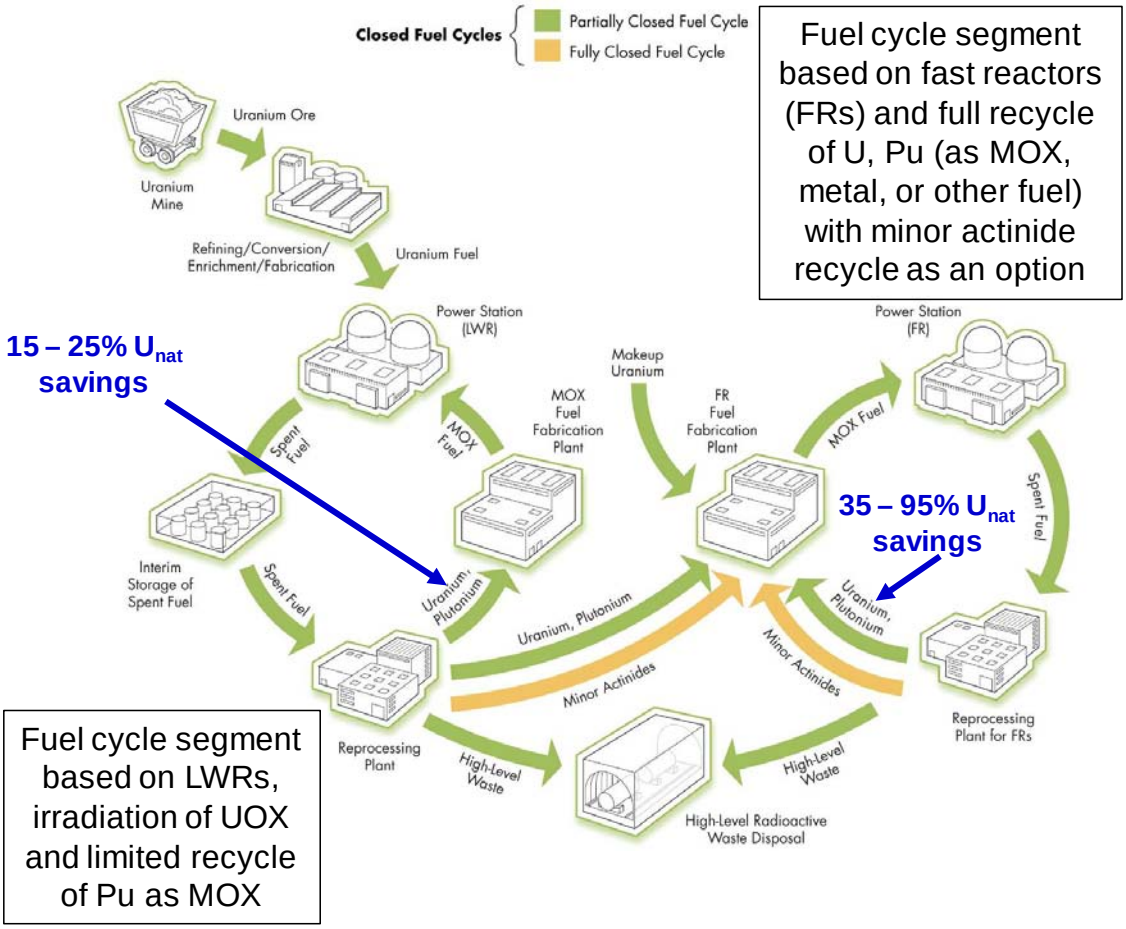

Figure 2. Evolutionary technology path from current reliance on light-water reactors (LWRs) to a partially-closed fuel cycle enabled by the introduction of fast reactors (FRs) to achieve desired goal of sustainable electricity generation through greater utilization of natural uranium resources. Deep geologic disposal for high-level waste is required for all fuel cycles. The option for full recycle (including minor actinides) is available, but not necessary for achieving the core strategic goal.

Nuclear Fuel Cycle Concept for DOE-NE Fuel Cycle R&D Fuel Cycle Survey – Chris Phillips, EnergySolutions LLC

Nuclear Fuel Cycle Concept for DOE-NE Fuel Cycle R&D Fuel Cycle Survey

Chris Phillips

EnergySolutions LLC, Richland, Washington, U.S.A.

May 2012

The NUEX Fuel Cycle - Overview

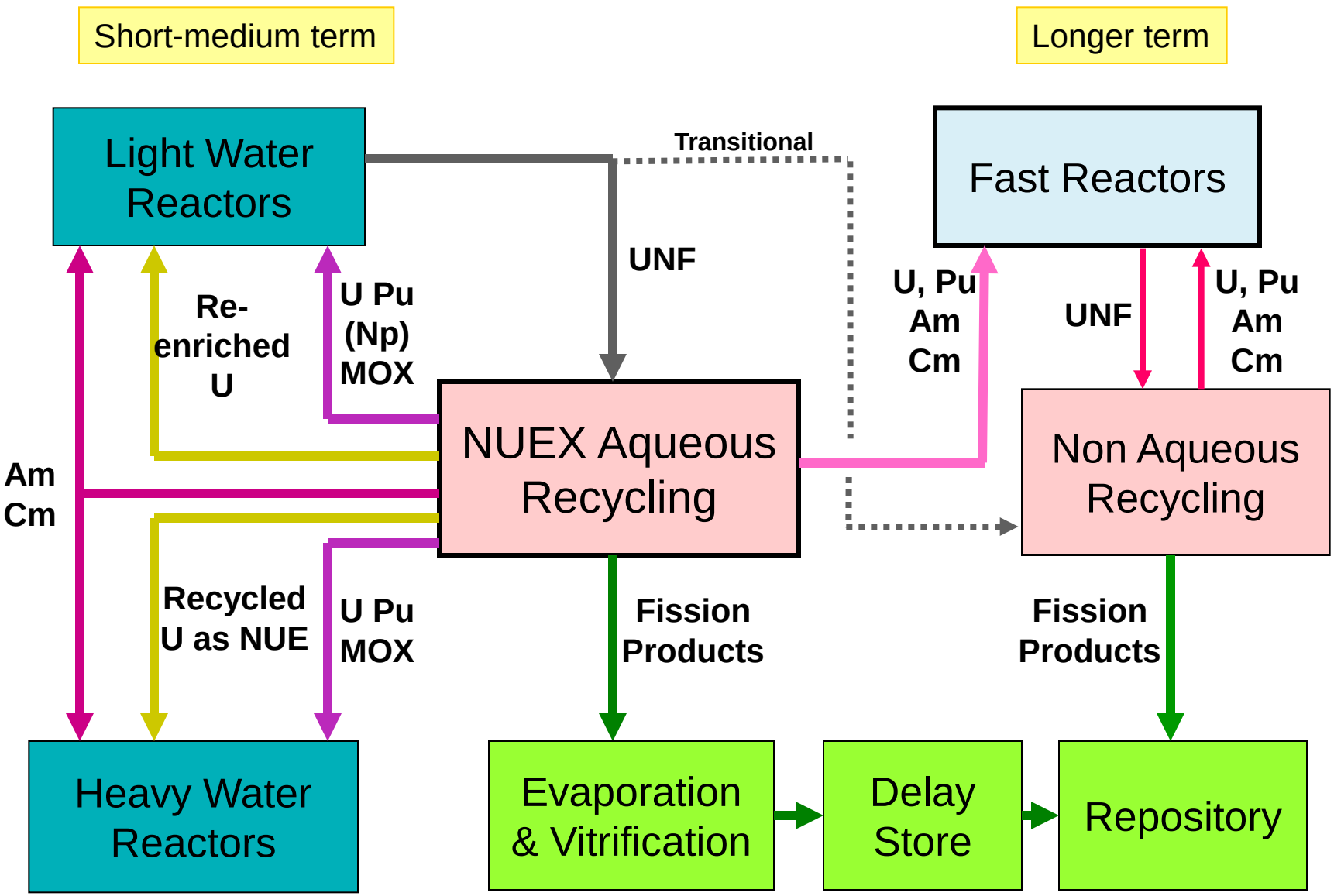

The NUEX Fuel Cycle - Explanation

ENERGYSOLUTIONS

1. Natural uranium is enriched to ~4% U-235 and fed as UOX fuel to PWRs
2. PWR used UOX nuclear fuel is initially aqueous-reprocessed with 4 outputs:
   a) Recycled uranium (RU)
   b) Mixed plutonium and recycled uranium (Pu/RU)
   c) Minor actinides (MAs)
   d) Fission products. These are vitrified, delay-stored (to let Cs,Sr decay) and then go to geologic store
3. The RU is used in two ways:
   a) Re-enriched to 4% U-235 and fed as UOX fuel to PWRs
   b) Mixed with depleted uranium to form natural uranium equivalent (NEU) fuel and fed to heavy water reactors (eg CANDUs). NUE is made to have the same reactivity as natural uranium
4. The mixed Pu/RU is used in two ways:
   a) Initially formed into MOX fuel and fed to PWRs
   b) Later formed into MOX fuel and fed to SFRs
5. The MAs are formed into targets and used in three ways:
   a) Initially destroyed in PWRs and in CANDUs. Targets are formed with inert materials
   b) Later destroyed in SFRs – this could be as targets or as part of the fuel
6. PWR used MOX nuclear fuel is aqueous-reprocessed with 4 outputs used the same way as in (2). This can be repeated until the neutron-absorbing U isotopes that grow in, and the loss of U-235, exceed the ability of Pu to compensate for loss of reactivity
7. Once a fleet of SFRs is operating:
   a) U, Pu and MAs from (2) and (6) can be formed into oxide SFR fuel and fed to SFRs.
   b) A non-aqueous reprocessing system can be established for SFR used fuel to recycle U, Pu and MAs to the SFRs
   c) PWR and MOX used nuclear fuel can be transitionally treated by a hybrid aqueous/non-aqueous process that removed the bulk of the U in an aqquois process, then uses a non-aqueous process to separate FPs and form the residual U, plus Pu and MAs into SFR fuel.

Three-Tier Full Recycle: LWR/LWR/ADS –

Holly Trellue, Eric Pitcher, Rich Sheffield, LANL

Fuel Cycle Option Title: Three-Tier Full Recycle: LWR/LWR/ADS

High-Level Objectives:

1) Produce electricity and/or process heat
2) Minimize waste disposal by partitioning and/or transmuting isotopes
3) Capitalize on existing infrastructure

Number of stages: 3

Stage 1: UOX fuel in PWR followed by UREX+ processing.
LEU oxide fuel is irradiated in PWR to 50 GWd/t burnup. Discharge fuel (DF) is cooled for 3 years in on-site storage and then sent to a reprocessing facility. Recovered plutonium (Pu) and neptunium (Np) is used in Stage 2. Recovered Am+Cm is sent to Stage 3. Fission products (FPs) are stored in an interim storage facility to reduce decay heat (100 to 300 years) and then sent to a disposal site.

Stage 2: MOX fuel in PWR followed by UREX+ processing (2 passes).
Recovered Pu from Stage 1 is used to make mixed oxide (MOX) fuel with depleted uranium (DU). The Pu/DU MOX is taken to a burnup of 50 GWd/t in PWRs. The DF is stored on-site for 3 years before and then sent to a reprocessing facility. Recovered Pu and Np is combined with slightly enriched (approx. 2.2%) U for a second pass in the PWR to a burnup of 50 GWd/t. Recovered Am+Cm is sent to Stage 3. Fission products (FPs) are stored in an interim storage facility to reduce decay heat (100 to 300 years) and then sent to a disposal site. After the second pass all remaining transuranics (TRU) in the DF are sent to Stage 3. The intent is that all fuel fabricated for Stage 2 can be done in glove boxes outside of hot cells, i.e., not requiring remote handling.

Stage 3: Accelerator Driven Minor Actinide Burner with UREX+ processing.
Uranium- and thorium-free oxide fuel is fabricated from the Am+Cm from Stage 1 and the TRU from Stage 2, and burned in an Accelerator Driven System (ADS) to a burnup of 150 GWd/t. The discharged fuel is cooled for 3 years on-site and then sent to a reprocessing facility. Recovered TRU is sent back to the Stage 3 fuel fabrication stream and mixed with streams from Stages 1 and 2. Fission products (FPs) are stored in an interim storage facility to reduce decay heat (100 to 300 years) and then sent to a disposal site. Power generated by Stage 3 intended for process heat applications. Stage 3 fuel fabrication will require remote handling.

Prepared by: Holly Trellue, Eric Pitcher, Rich Sheffield, LANL
Date: May 2012

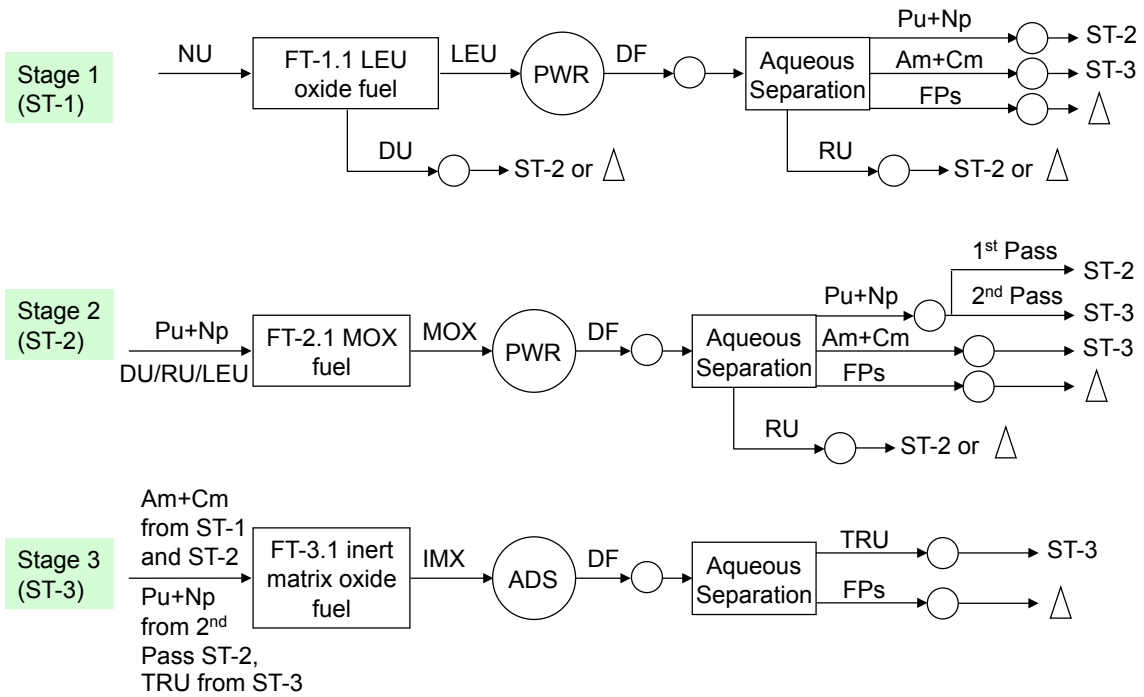
Stage 1
(ST-1)
NU
FT-1.1 LEU
oxide fuel
LEU
PWR
DF
Aqueous
Separation
Pu+Np
Am+Cm
FPs
ST-2
ST-3
DU
ST-2 or
RU
ST-2 or
Stage 2
(ST-2)
Pu+Np
DU/RU/LEU
FT-2.1 MOX
fuel
MOX
PWR
DF
Aqueous
Separation
Pu+Np
1st Pass
2nd Pass
Am+Cm
FPs
ST-2
ST-3
ST-3
RU
ST-2 or
Stage 3
(ST-3)
Am+Cm
from ST-1
and ST-2
Pu+Np
from 2nd
Pass ST-2,
TRU from ST-3
FT-3.1 inert
matrix oxide
fuel
IMX
ADS
DF
Aqueous
Separation
TRU
FPs
ST-3

Fuel Cycle Option Title: Three-Tier Full Recycle: LWR/SFR/ADS

High-Level Objectives:

1) Produce electricity and/or process heat
2) Minimize waste disposal by partitioning and/or transmuting isotopes
3) Capitalize on existing infrastructure

Number of stages: 3

Stage 1: UOX fuel in PWR followed by UREX+ processing.
LEU oxide fuel is irradiated in PWR to 50 GWd/t burnup. Discharge fuel (DF) is cooled for 3 years in on-site storage and then sent to a reprocessing facility. Recovered plutonium (Pu) and neptunium (Np) is used in Stage 2. Recovered Am+Cm is sent to Stage 3. Fission products (FPs) are stored in an interim storage facility to reduce decay heat (100 to 300 years) and then sent to a disposal site.

Stage 2: MOX fuel in SFR followed by UREX+ processing (2 passes).
Recovered Pu from Stage 1 is used to make mixed oxide (MOX) fuel with depleted uranium (DU) or recovered uranium (RU). The Pu/DU MOX is taken to a burnup of 150 GWd/t in SFRs. The DF is stored on-site for 3 years before and then sent to a reprocessing facility. Recovered Pu and Np is combined with slightly enriched (approx. 2.2%) U for a second pass in the SFR to a burnup of ?? GWd/t. Recovered Am+Cm is sent to Stage 3. Fission products (FPs) are stored in an interim storage facility to reduce decay heat (100 to 300 years) and then sent to a disposal site. After the second pass all remaining transuranics (TRU) in the DF are sent to Stage 3. The intent is that all fuel fabricated for Stage 2 can be done in glove boxes outside of hot cells, i.e., not requiring remote handling.

Stage 3: Accelerator Driven Minor Actinide Burner with UREX+ processing.
Uranium- and thorium-free oxide fuel is fabricated from the Am+Cm from Stage 1 and the TRU from Stage 2, and burned in an Accelerator Driven System (ADS) to a burnup of 150 GWd/t. The discharged fuel is cooled for 3 years on-site and then sent to a reprocessing facility. Recovered TRU is sent back to the Stage 3 fuel fabrication stream and mixed with streams from Stages 1 and 2. Fission products (FPs) are stored in an interim storage facility to reduce decay heat (100 to 300 years) and then sent to a disposal site. Power generated by Stage 3 intended for process heat applications. Stage 3 fuel fabrication will require remote handling.

Prepared by: Holly Trellue, Eric Pitcher, Rich Sheffield, LANL
Date: May 2012

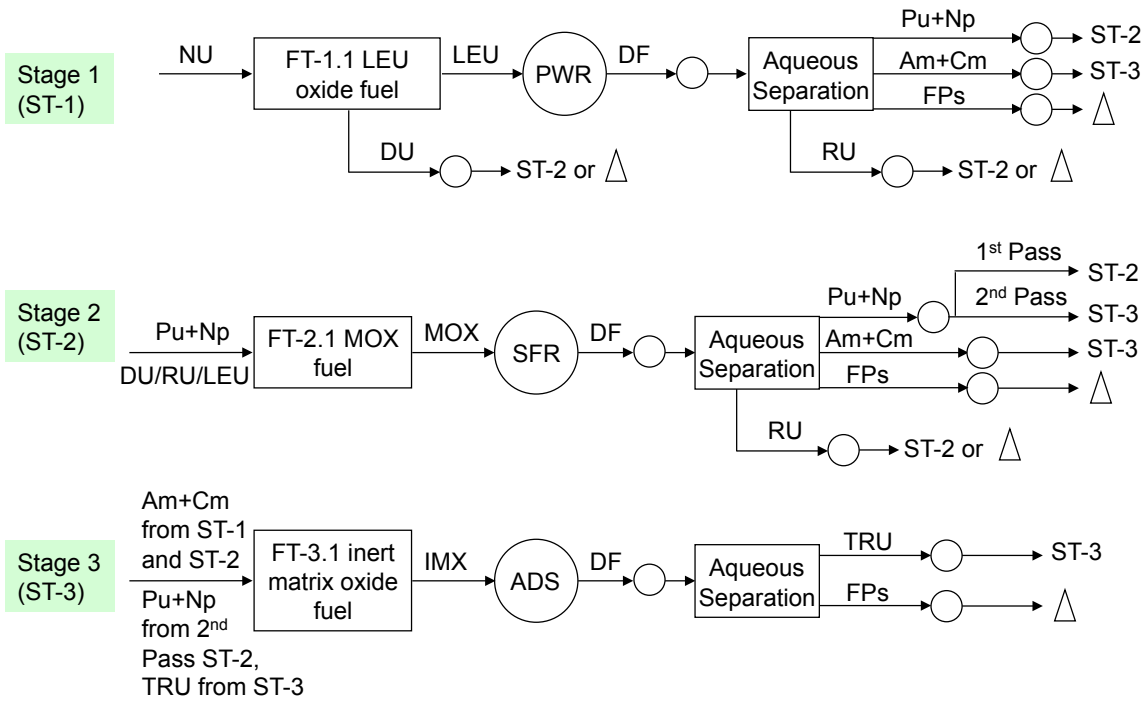
Stage 1
(ST-1)
NU
FT-1.1 LEU
oxide fuel
LEU
PWR
DF
Aqueous
Separation
Pu+Np
Am+Cm
FPs
ST-2
ST-3
DU
ST-2 or
RU
ST-2 or
Stage 2
(ST-2)
Pu+Np
DU/RU/LEU
FT-2.1 MOX
fuel
MOX
SFR
DF
Aqueous
Separation
Pu+Np
1st Pass
2nd Pass
Am+Cm
FPs
ST-2
ST-3
ST-3
RU
ST-2 or
Stage 3
(ST-3)
Am+Cm
from ST-1
and ST-2
Pu+Np
from 2nd
Pass ST-2,
TRU from ST-3
FT-3.1 inert
matrix oxide
fuel
IMX
ADS
DF
Aqueous
Separation
TRU
FPs
ST-3

Fuel Cycle Option Title: Three-Tier Full Recycle: LWR/HWR/HWR

High-Level Objectives:

1) Produce electricity and/or process heat
2) Minimize waste disposal by partitioning and/or transmuting isotopes
3) Capitalize on existing infrastructure

Number of stages: 3

Stage 1: LEU and/or U/Th OX fuel in PWR followed by voloxidation.
LEU and/or U/Th oxide fuel is irradiated in PWR to 50 GWd/t burnup. Discharge fuel (DF) is cooled for 3 years in on-site storage and then sent to a voloxidation facility. All materials except certain fission products (H, Kr, Xe, I, Rh, Ru, Tc, Mo, Te, and Cs) are sent to Stage 2. The above fission products (FPs) are stored in an interim storage facility to reduce decay heat (100 to 300 years) and then sent to a disposal site.

Stage 2: DF fuel in a Heavy Water-moderated Reactor (HWR), followed by PYRO-Fluorination + processing.
Recovered material from Stage 1 is directly converted to OX after voloxidation process (called Mixed Oxide (MOX) fuel here but is not traditional Pu/U MOX). DF MOX fuel is taken to a burnup of ~15 GWd/t or more in the HWR with continuous on-line refueling. The DF is stored on-site for 3 years and then sent to a reprocessing facility. Recovered U and Pa from ThO2 DF is combined with more DF from a PWR with a burnup of ~50 GWd/t (Stage 1) and sent to Stage 3; remaining material is sent to a disposal site. Fission products (FPs) are stored in an interim storage facility to reduce decay heat (100 to 300 years) and then sent to a disposal site. Energy generated by coolant is intended for process heat applications. The intent is that all fuel fabricated for Stage 2 can be done in glove boxes outside of hot cells, i.e., not requiring remote handling.

Stage 3: Th/U OX with recycled U and Pa in HWR.
Recovered material from Stages 1 and 2 is directly converted to OX after voloxidation and/or PYRO-Fluorination processes respectively. The recycled U and Pa from Stage 2 is mixed with U/Th voloxidized-DF from Stage 1 and placed in the HWR. The resulting fuel is taken to a burnup of ~15 GWd/t or more in the HWR. The discharged fuel may be sent to a voloxidation site where certain fission products are removed and the remaining fuel can be re-fabricated with fresh U and Pa from Stage 2 and re-irradiated. Stage 3 fuel fabrication will require remote handling. Energy generated by coolant is intended for process heat applications.

The main advantage of this option is that a full implementation of this fuel cycle with Th/U in a LWR and a HWR results in the generation of about an order of magnitude less plutonium than what is currently discharged from once-through LWRs (see Reference below). However, this option can still be implemented with LEU in LWRs and HWRs with solely Stages 1 and 2. The coolant in the HWR can either be heavy water, light water, or liquid salt, which could produce high temperature output without pressurization.

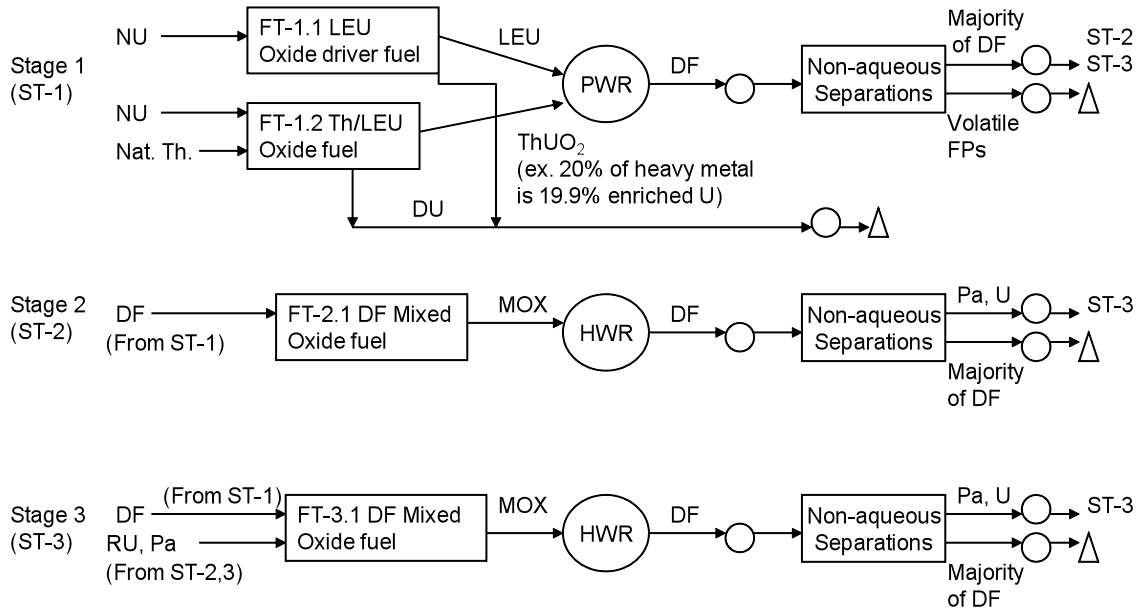

Reference:
H. R. Trellue, R. J. Kapernick, D.V. Rao, J. Zhang, J. D. Galloway, "Salt-Cooled Modular Innovative Thorium Heavy Water-Moderated Reactor System," *Nuclear Technology*, to be published in near future (2012).

Prepared by: Holly Trellue, LANL
Date: May 2012