3D CFD MODEL OF A MULTI-CELL HIGH TEMPERATURE ELECTROLYSIS STACK

Grant Hawkes
Jim O'Brien
Carl Stoots
Brian Hawkes

AIChE Annual Meeting

Salt Lake City

Nov 4-9, 2007

Idaho National Laboratory

INL has been designated as the lead laboratory for High-Temperature Electrolysis (HTE) Research and Development under the DOE Nuclear Hydrogen Initiative

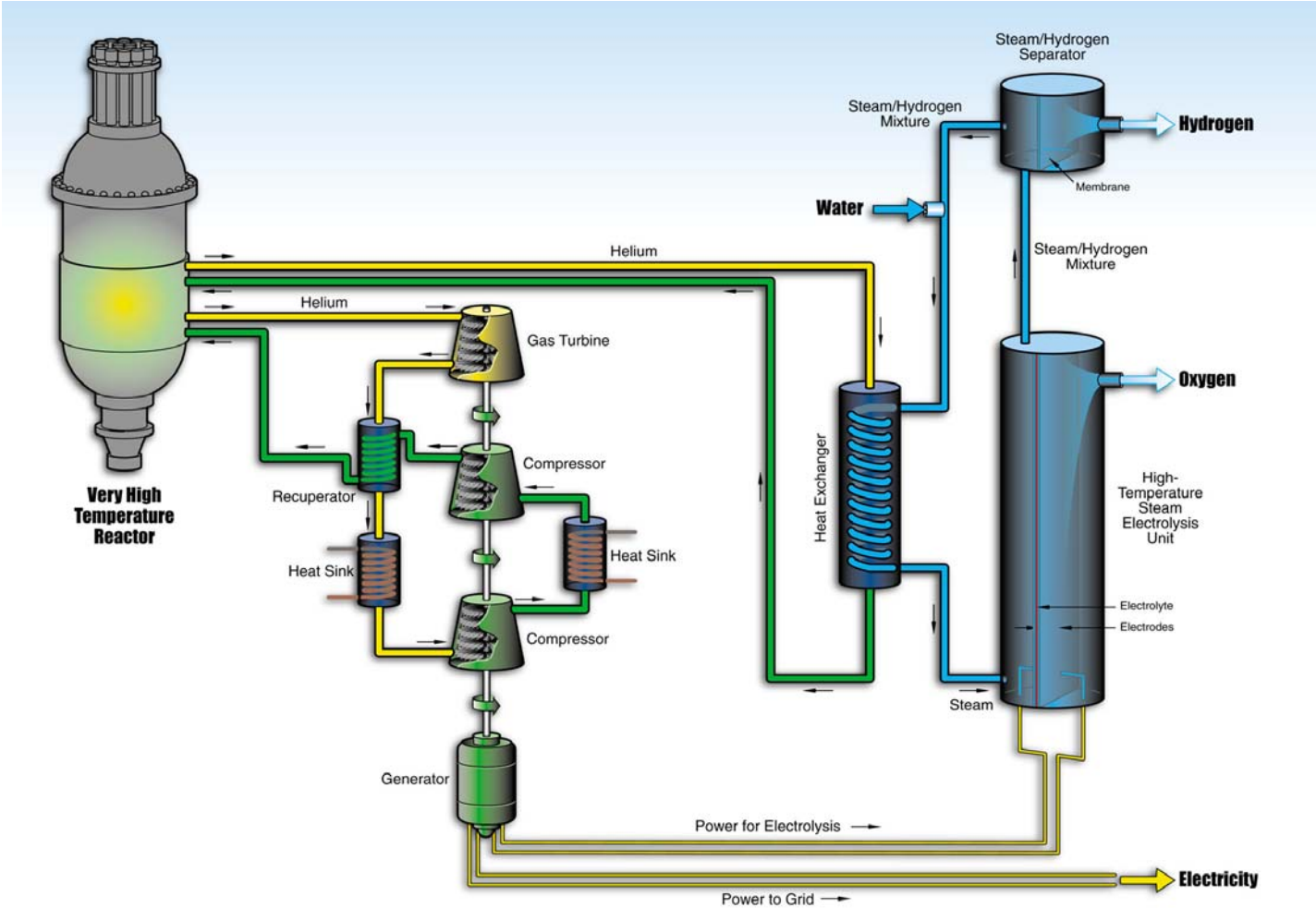

HTE enables efficient large-scale production of hydrogen without consuming fossil fuels and without any emission of greenhouse gases

Idaho National Laboratory

INL HTE Research Scope

Small-Scale Experiments

CFD Simulation

Demonstration

System Modeling

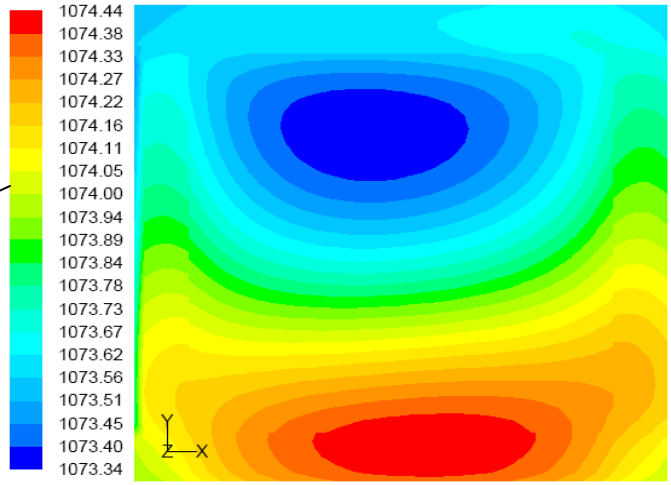

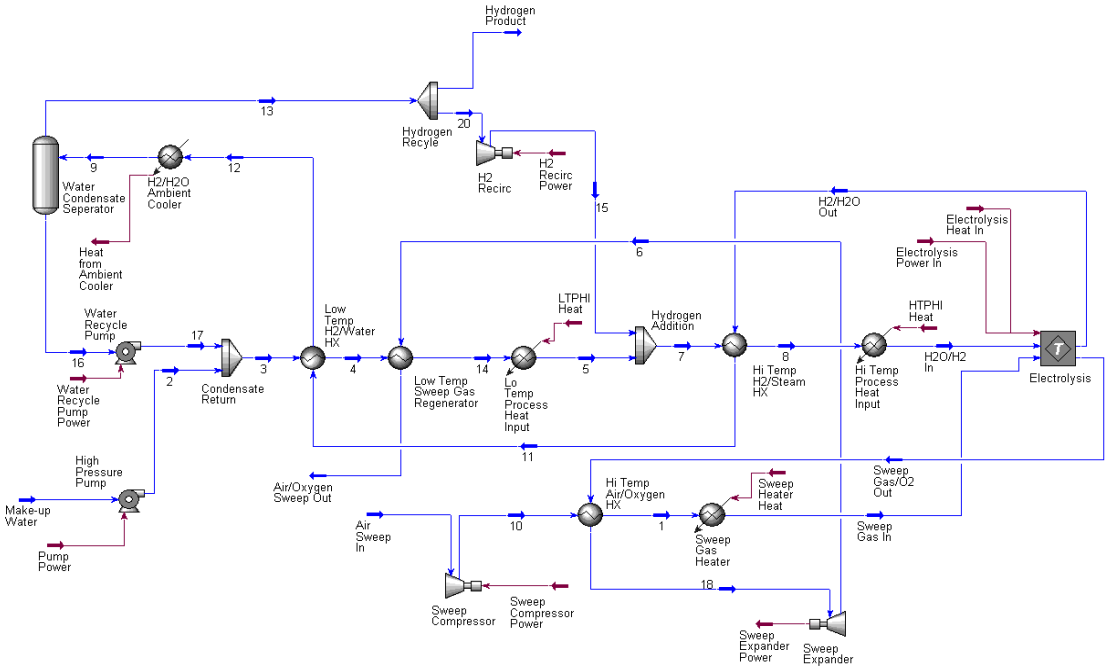

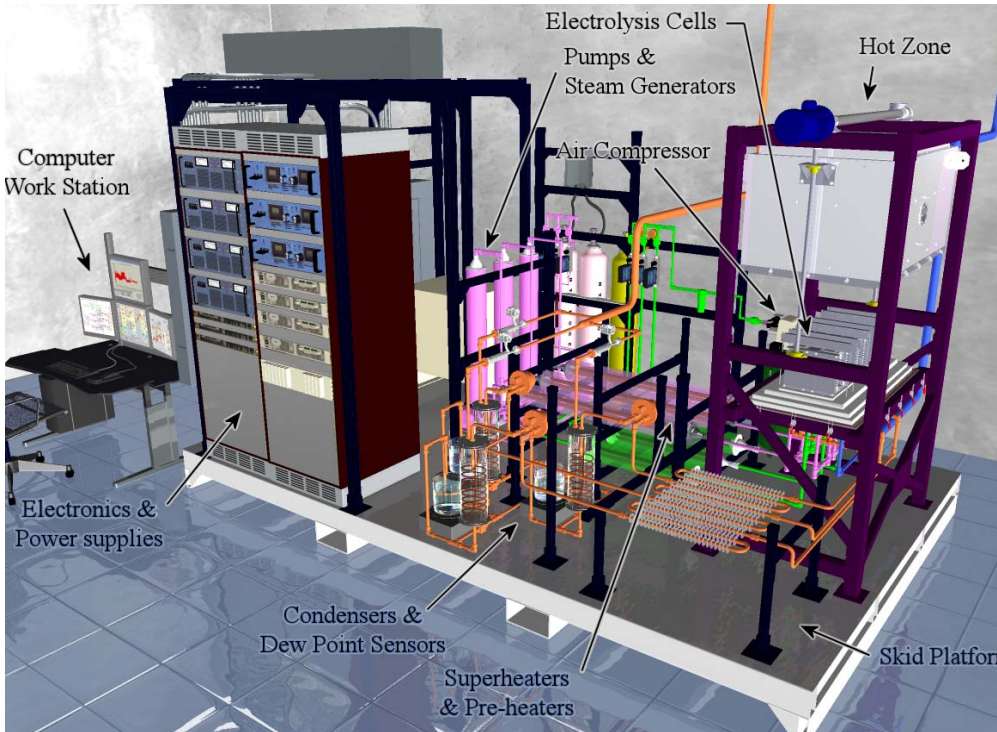

ILS Module

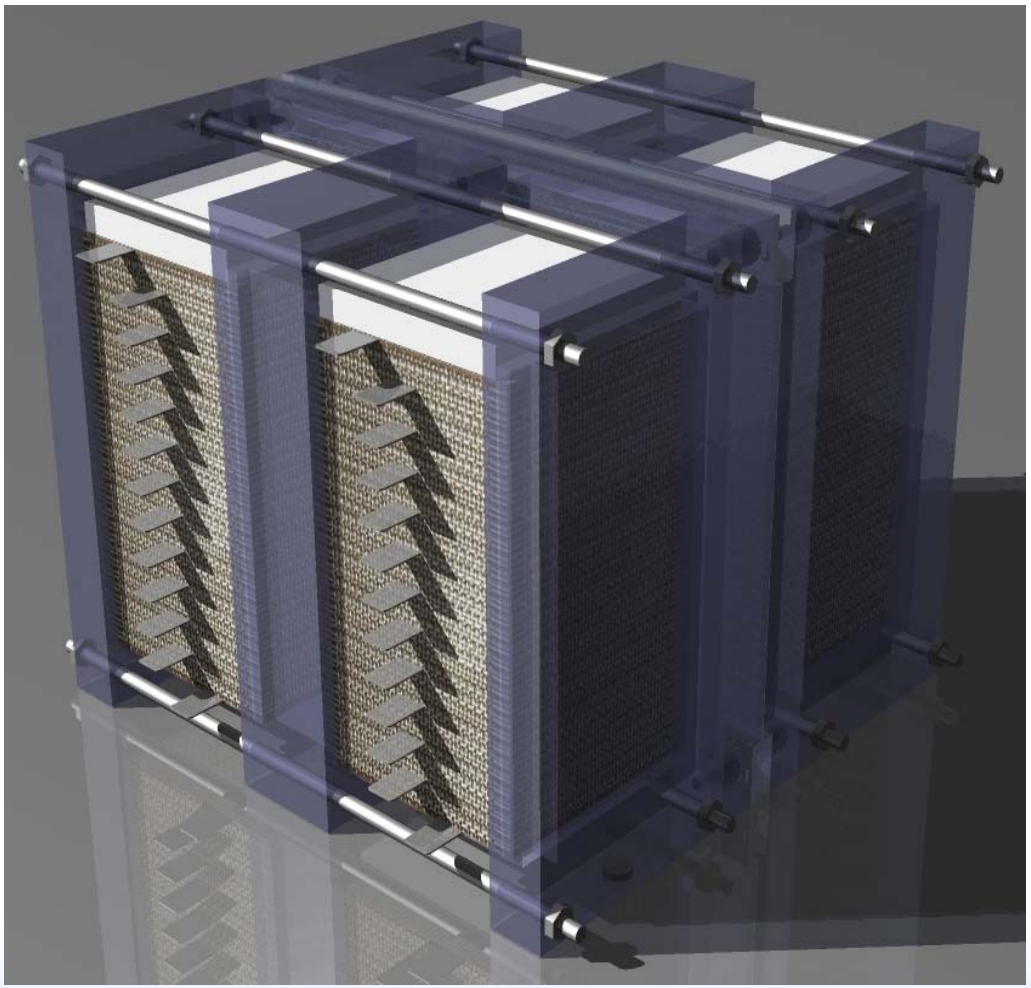

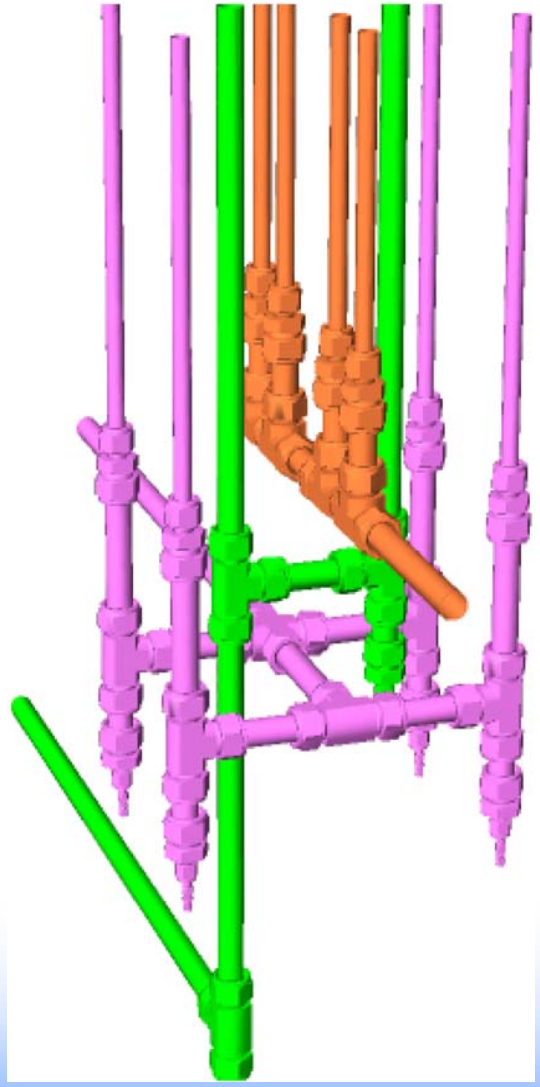

Planar Electrolysis Stack

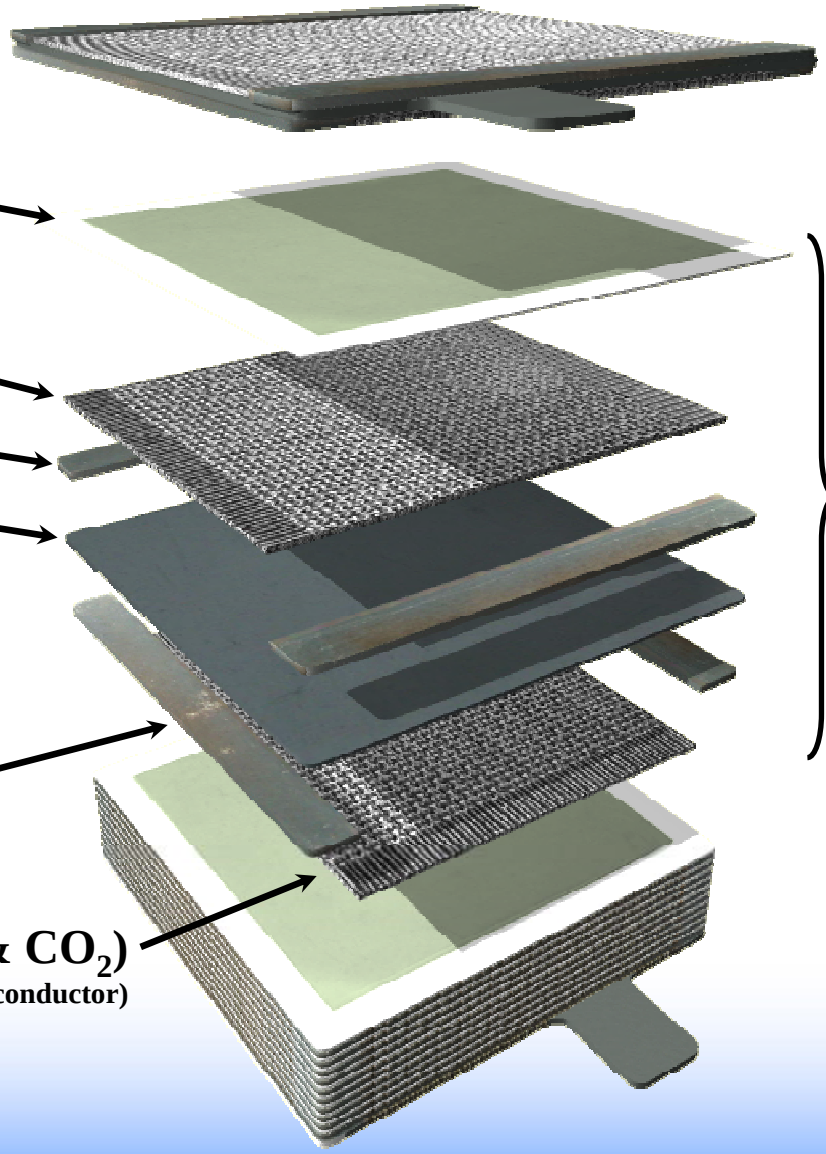

Idaho National Laboratory

Objectives of Analysis

- **Evaluate uniformity of flow distribution between cells**
- **Evaluate effect of any flow maldistribution on overall stack electrolytic performance**

Model Description

- Mesh created with I-DEAS
- CFD model run with FLUENT
  - FLUENT core mass, momentum, energy, species, boundary conditions
- FLUENT SOFC module add-on
  - Mass Sources and Sinks
  - Ohmic Heating
  - Voltage and Current calculations
  - Nernst Potential, Activation Overpotential
  - Contact Resistance
  - Electrical Conductivity, Tortuosity

ILS Model Mesh, Top View

inlet steam/hydrogen plenum

inlet air plenum

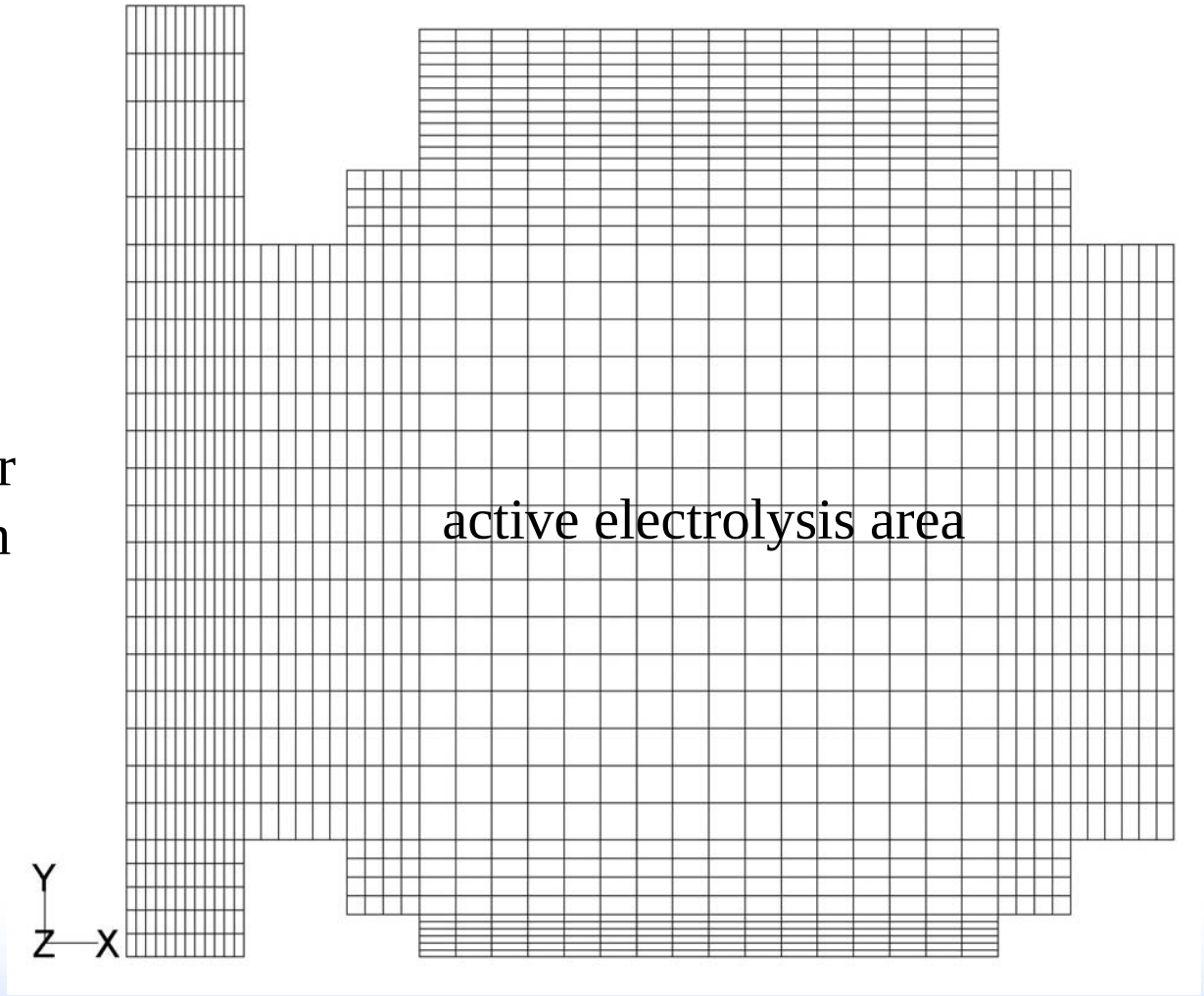

outlet air

outlet steam/hydrogen plenum

ILS Numerical Model

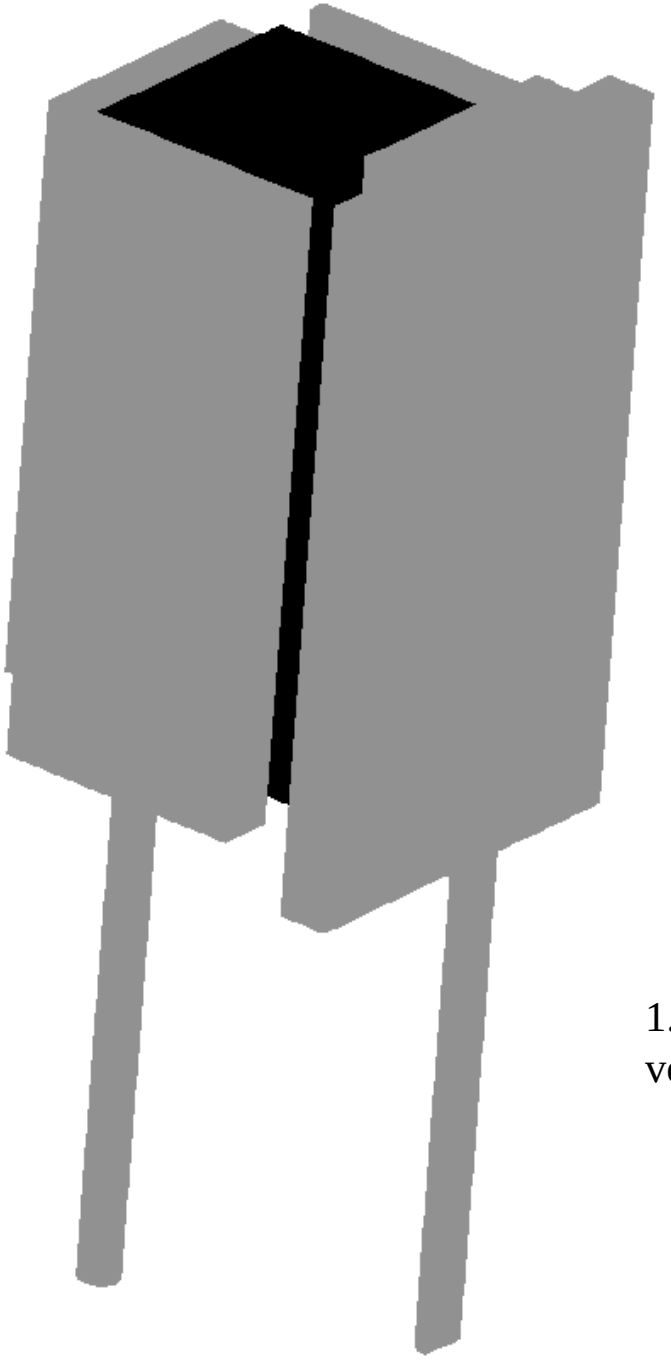

1.5 million finite-volume cells

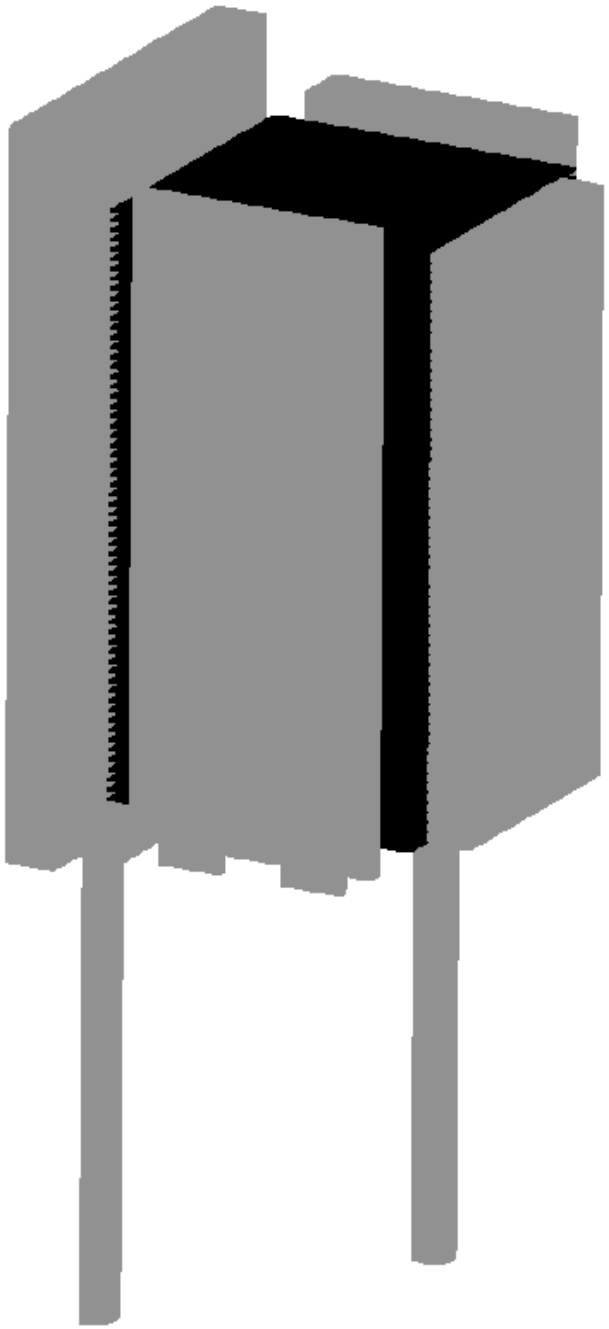

ILS Model Per-Cell Mass Flow Rates

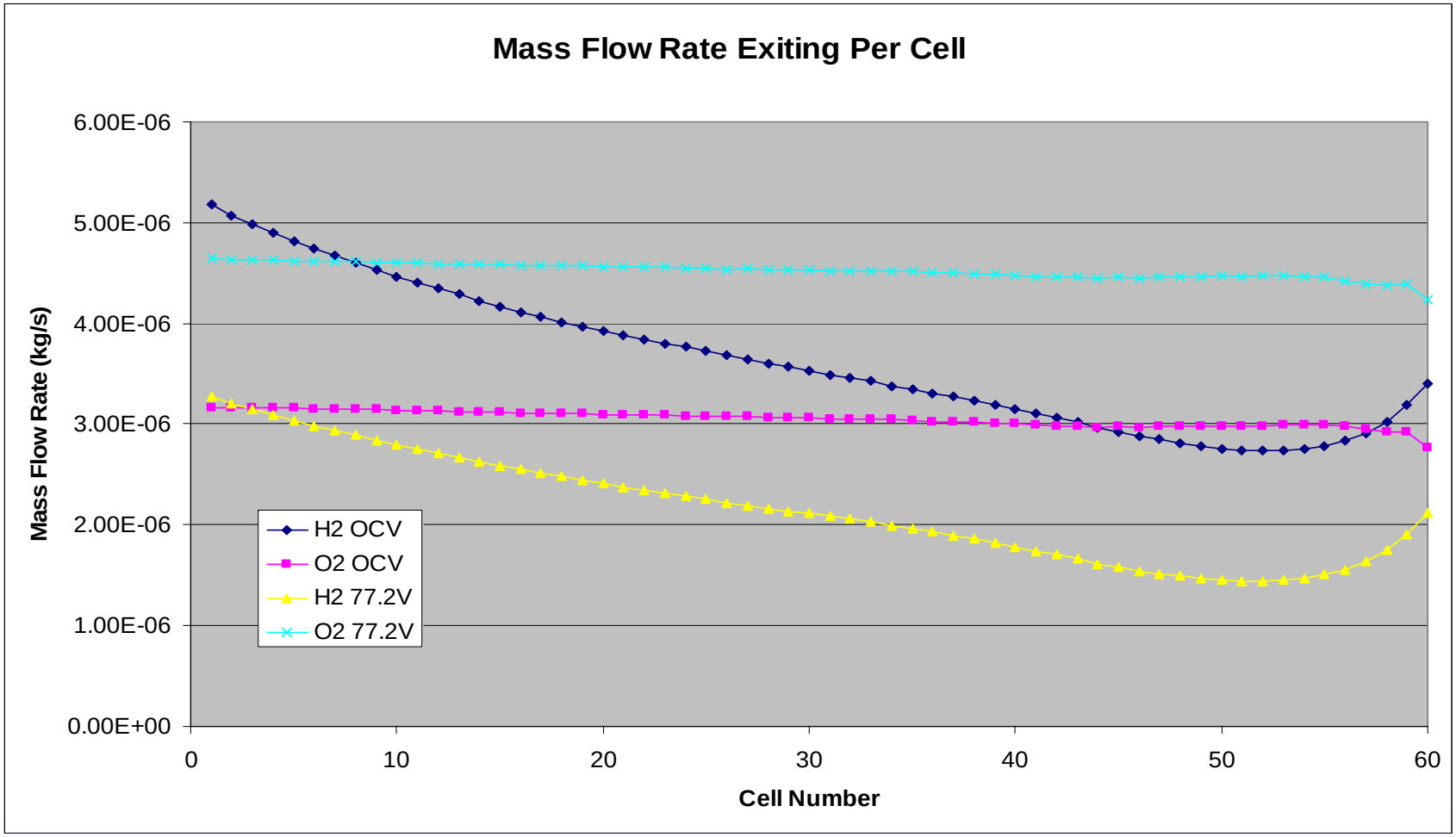

Idaho National Laboratory

Pressure Difference H2/H2O Inlet/Outlet OCV

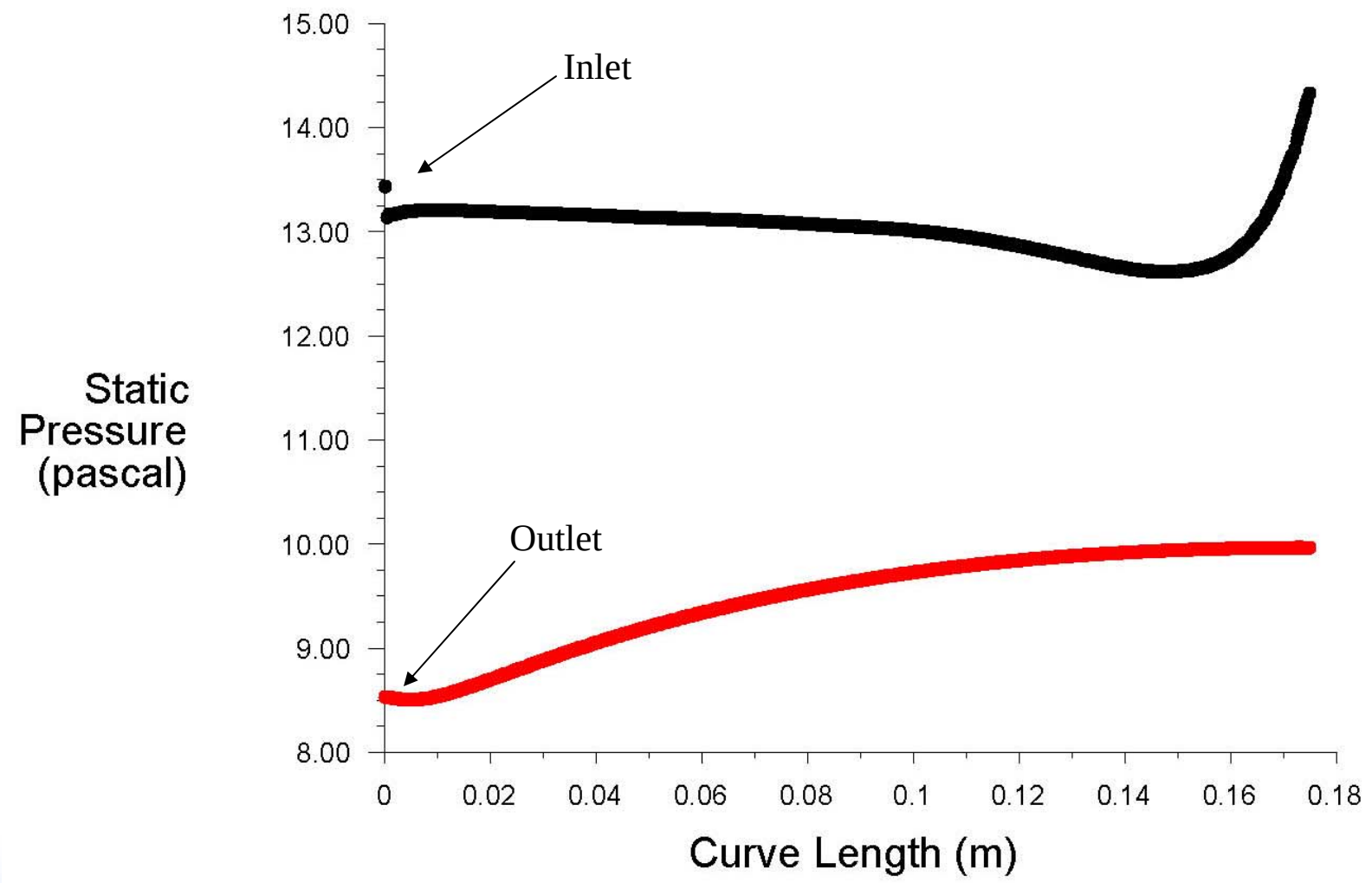

Pressure Contours Inlet and Outlet Plena

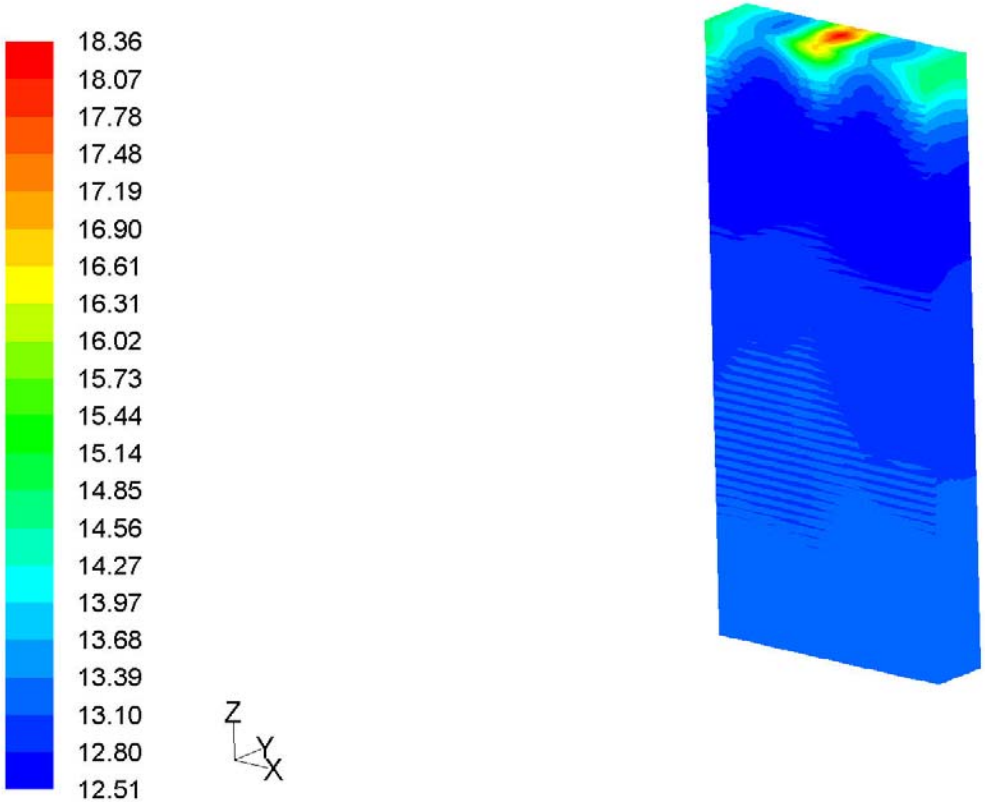

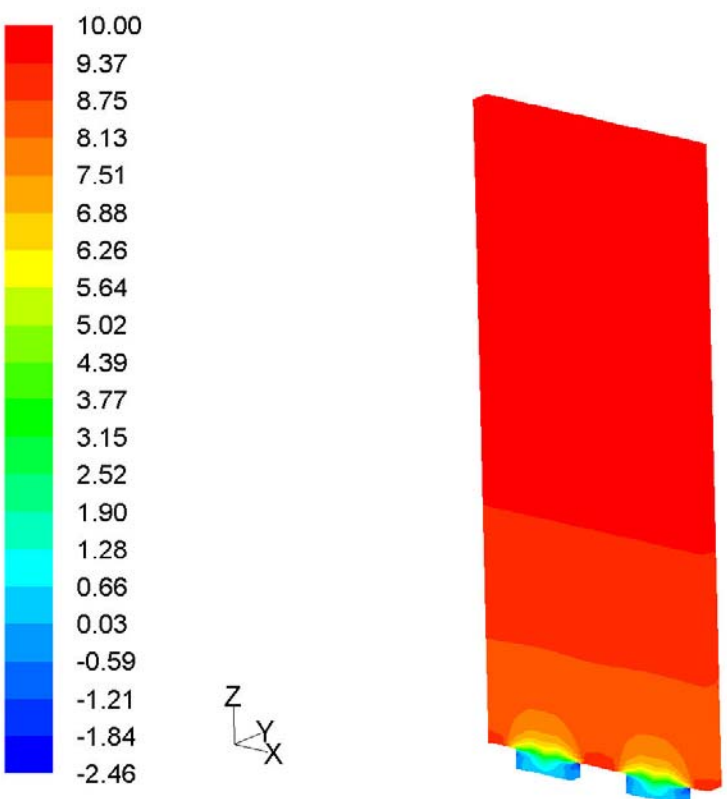

Temperature Contours

OCV

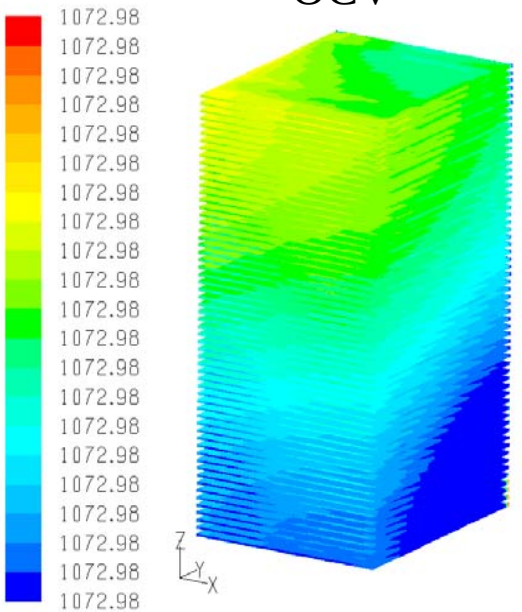

60 V (1 V/cell)

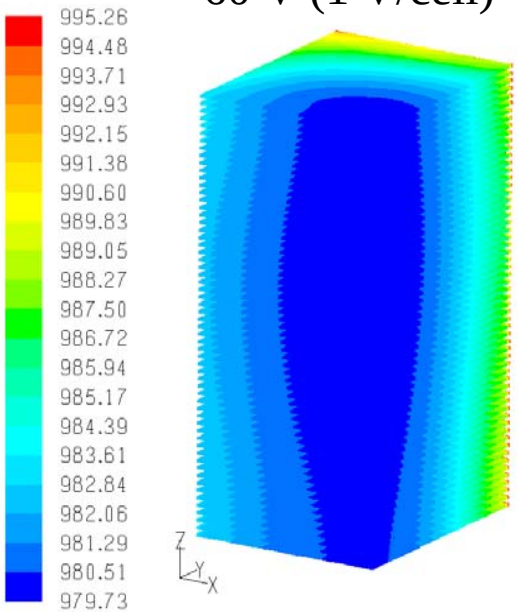

77.2 V (1.287 V/cell)

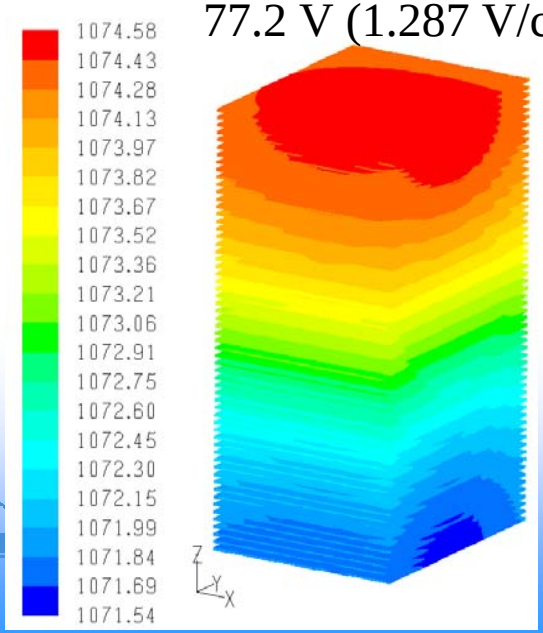

80 V (1.33 V/cell)

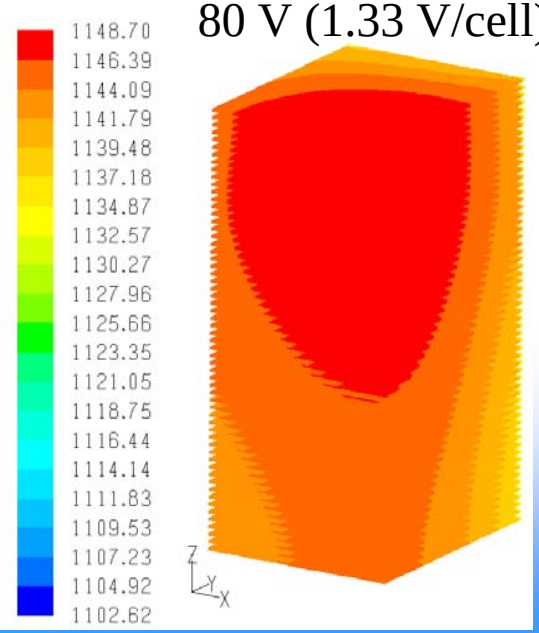

H2 Mole Fraction Contours

OCV

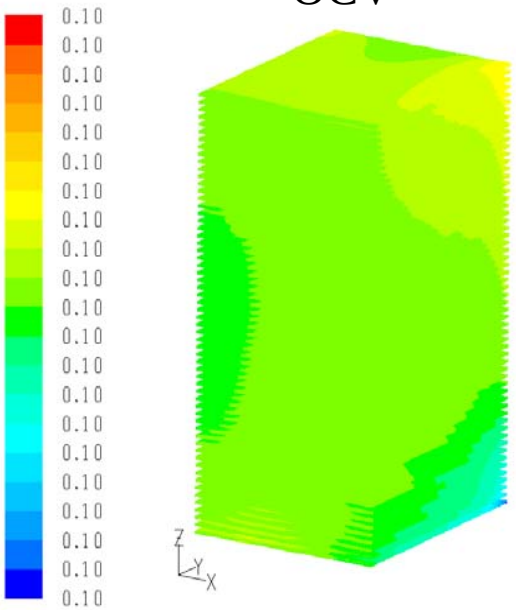

60 V (1 V/cell)

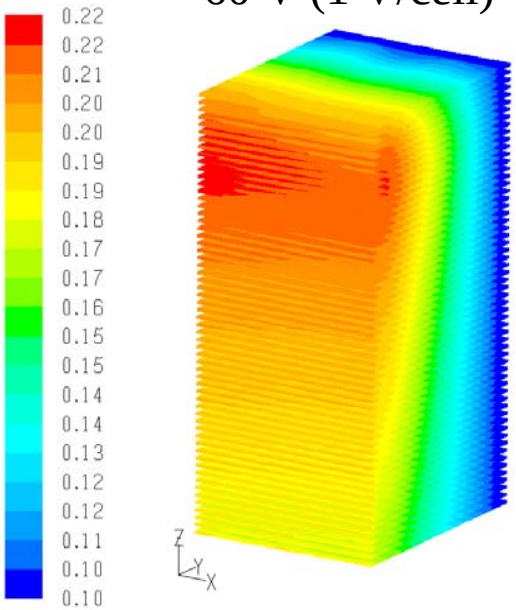

77.2 V (1.287 V/cell)

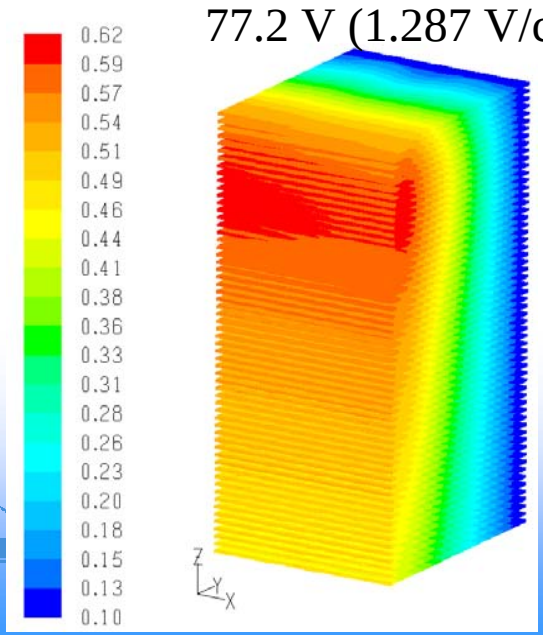

80 V (1.33 V/cell)

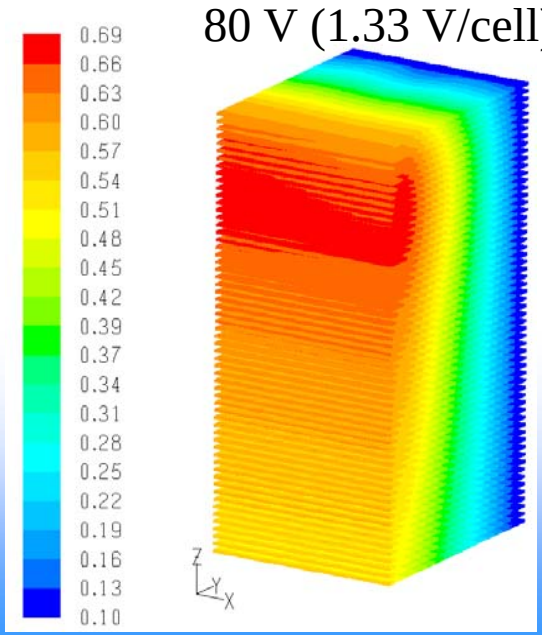

Nernst Potential

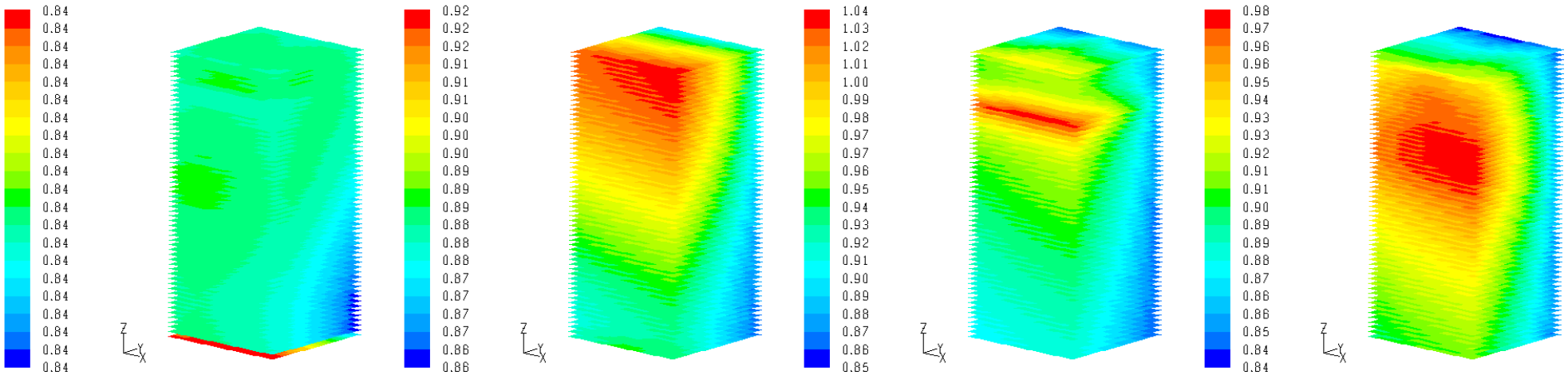

Nernst potential (V) for OCV, 60V, 77.2V, and 80V

Current Density

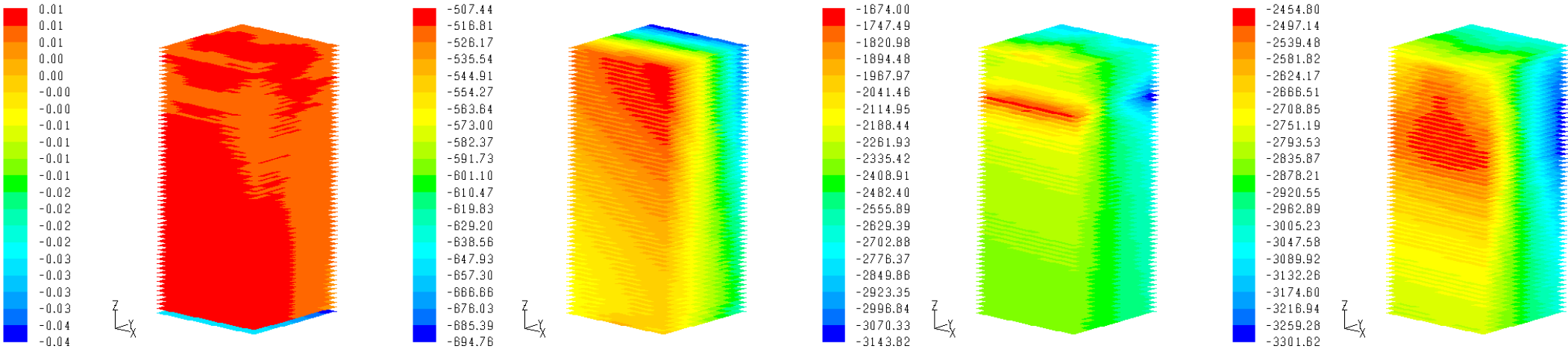

Current density (A/m^2) for OCV, 60V, 77.2V, and 80V

Operating Voltage

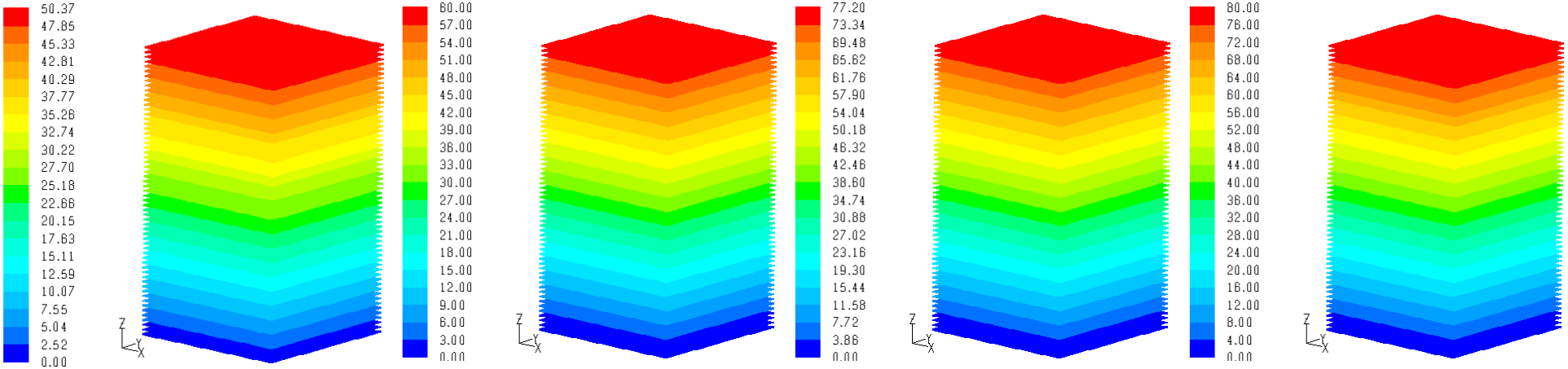

Operating voltage (V) for OCV, 60V, 77.2V, and 80V

O2 Mole Fractions

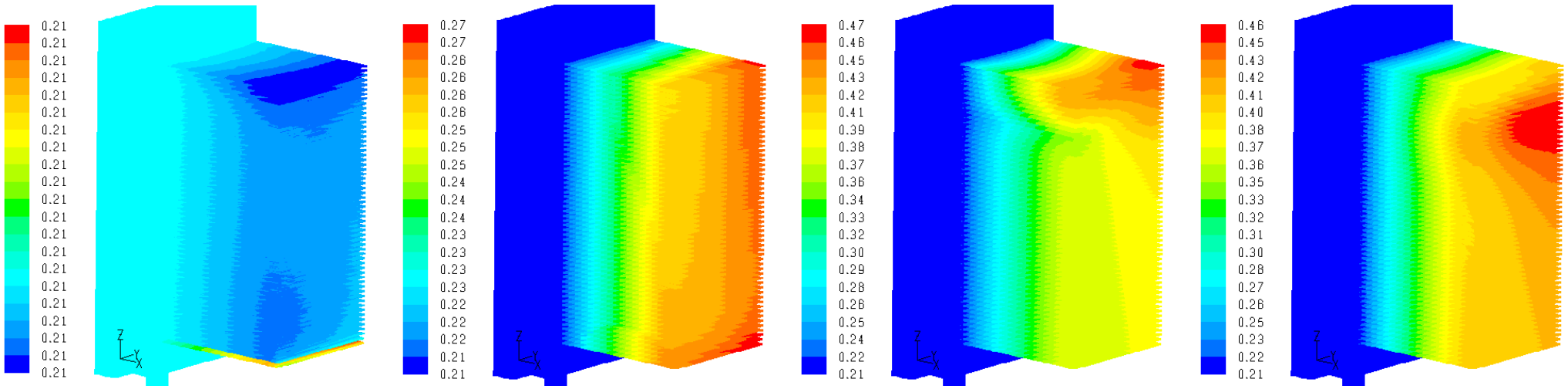

O2 mole fraction for OCV, 60V, 77.2V, and 80V

Co-Electrolysis

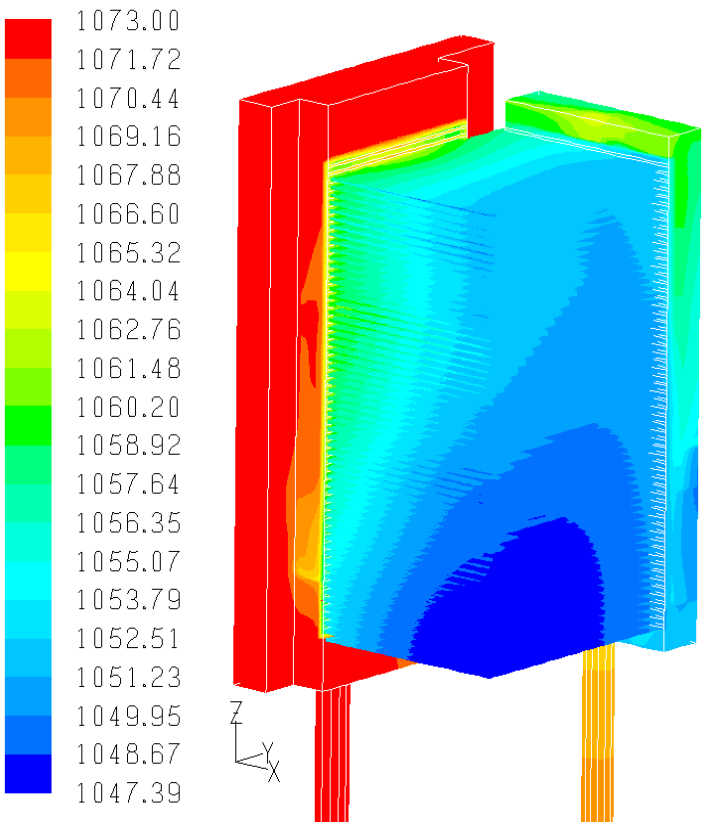

Temperature

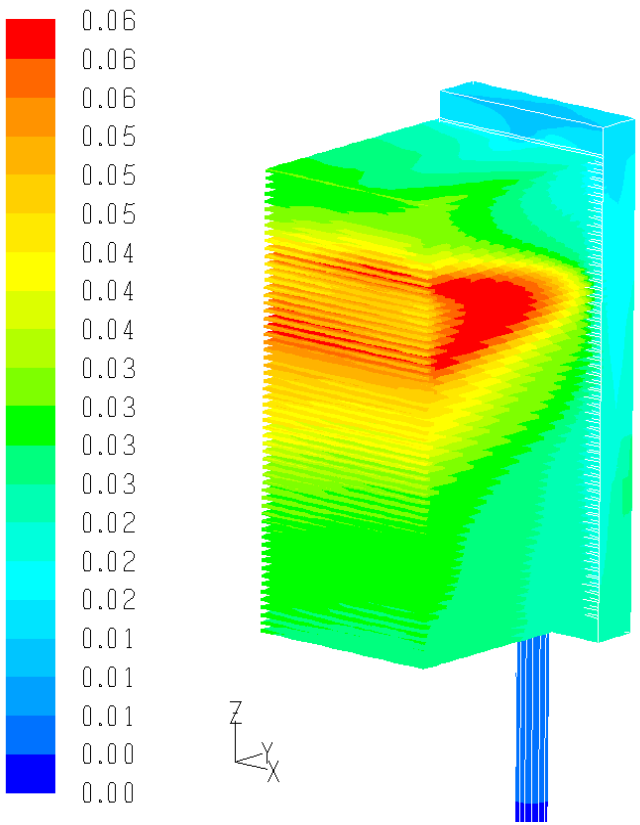

CO Mole Fraction

Idaho National Laboratory

Conclusions

- **Flow distribution is critical**
- **Electrolytic performance depends on flow distribution**
- **Inlet and outlet plena design contribute to flow distribution**
- **FLUENT solves large SOEC models with reasonable looking results**