Parametric Study of Large-Scale Production of Syngas via High Temperature Co-Electrolysis

J. E. O'Brien, M. G. McKellar, C. M. Stoots, J. S. Herring, and G. L. Hawkes

Idaho National Laboratory

AIChE Annual Meeting

Salt Lake City

November 7, 2007

Idaho National Laboratory

INL has been designated as the lead laboratory for High-Temperature Electrolysis (HTE) Research and Development under the DOE Nuclear Hydrogen Initiative

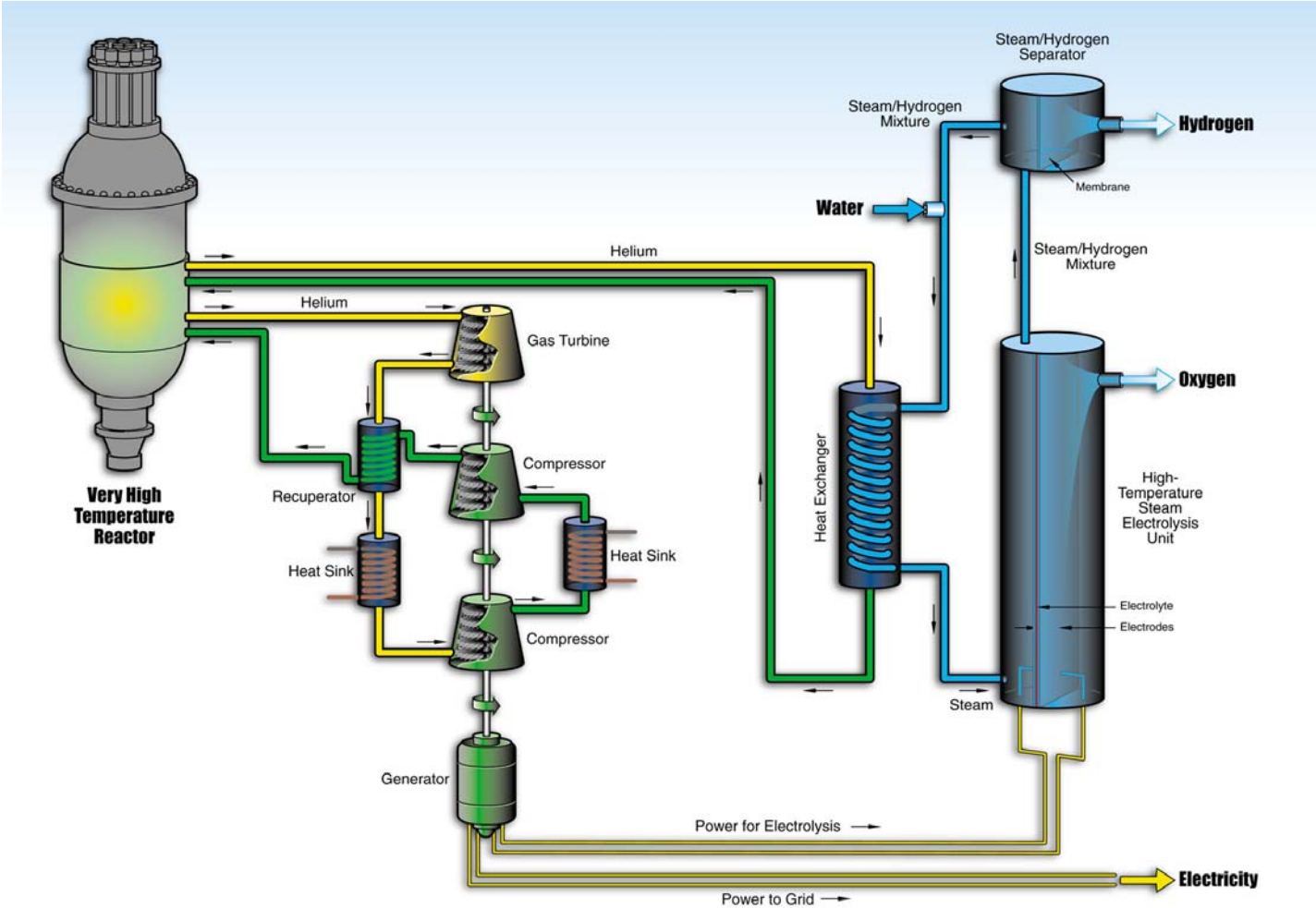

HTE enables efficient large-scale production of hydrogen without consuming fossil fuels and without any emission of greenhouse gases

Idaho National Laboratory

Related Project: Coelectrolysis of Steam and Carbon Dioxide for direct Production of Syngas

- The solid oxide electrolytes used for HTE conduct oxygen ions. Therefore CO_2 can be electrolyzed to CO as well as H_2O to H_2
- Coelectrolysis refers to simultaneous electrolysis of H_2O and CO_2 to form H_2 and CO (syngas)
- Depending on the source of the CO_2 (e.g., biomass), and the electrical power (e.g., nuclear) this process has the potential to enable a carbon-neutral synthetic fuel cycle

Idaho National Laboratory

High-Temperature Co-Electrolysis Concept for Syngas Production

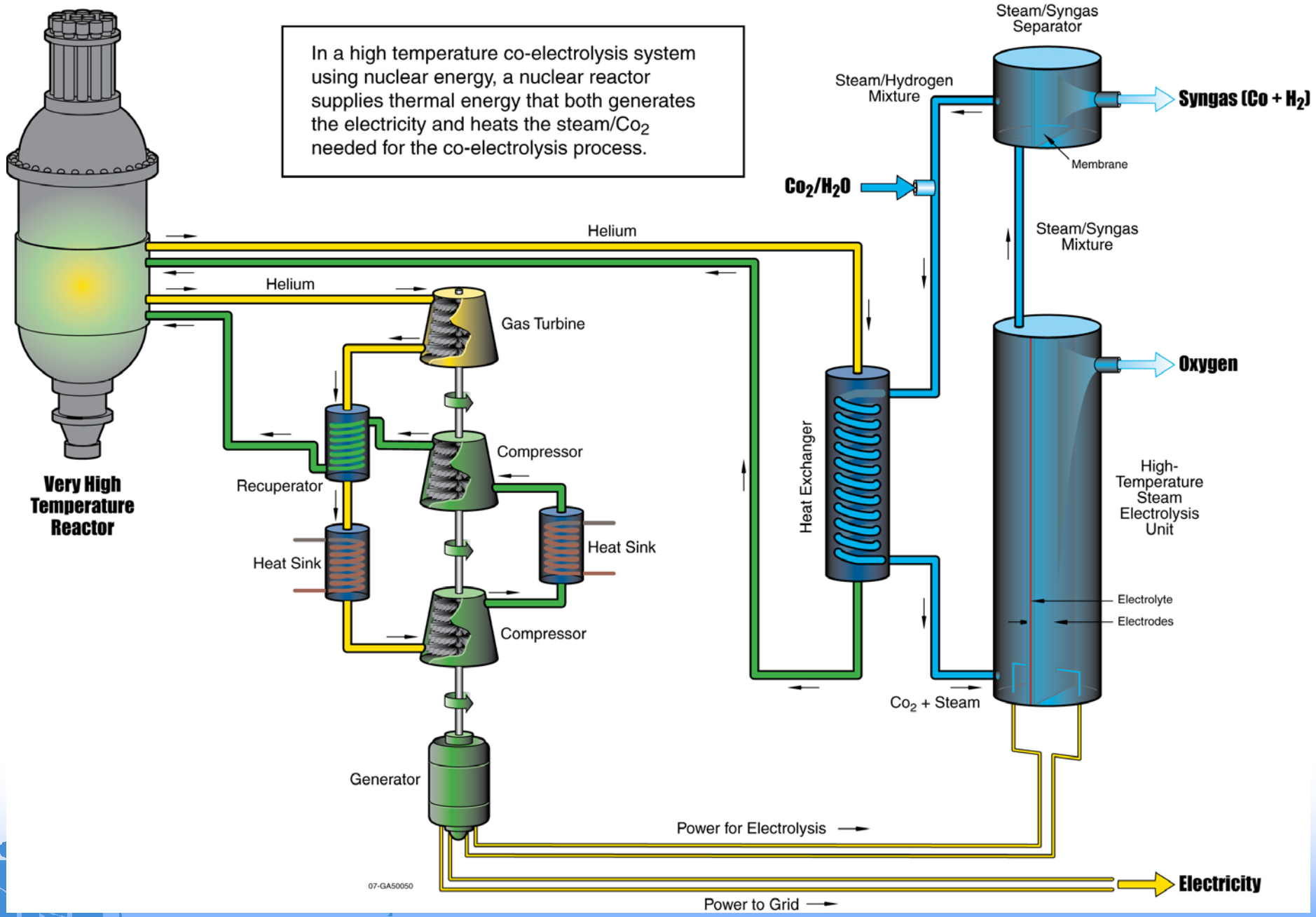

Coelectrolysis of Steam and Carbon Dioxide for Direct Production of Syngas

$$\underbrace{H_2O + CO_2 \xrightarrow{\text{electrical power + heat}} H_2 + CO}_{\text{cathode side}} + \underbrace{O_2}_{\text{anode side}}$$

Coelectrolysis chemistry is complicated by the Reverse Shift Reaction (RSR)

$$CO_2 + H_2 \leftrightarrow CO + H_2O$$

Idaho National Laboratory

Chemical Equilibrium Coelectrolysis (CEC) Model Schematic

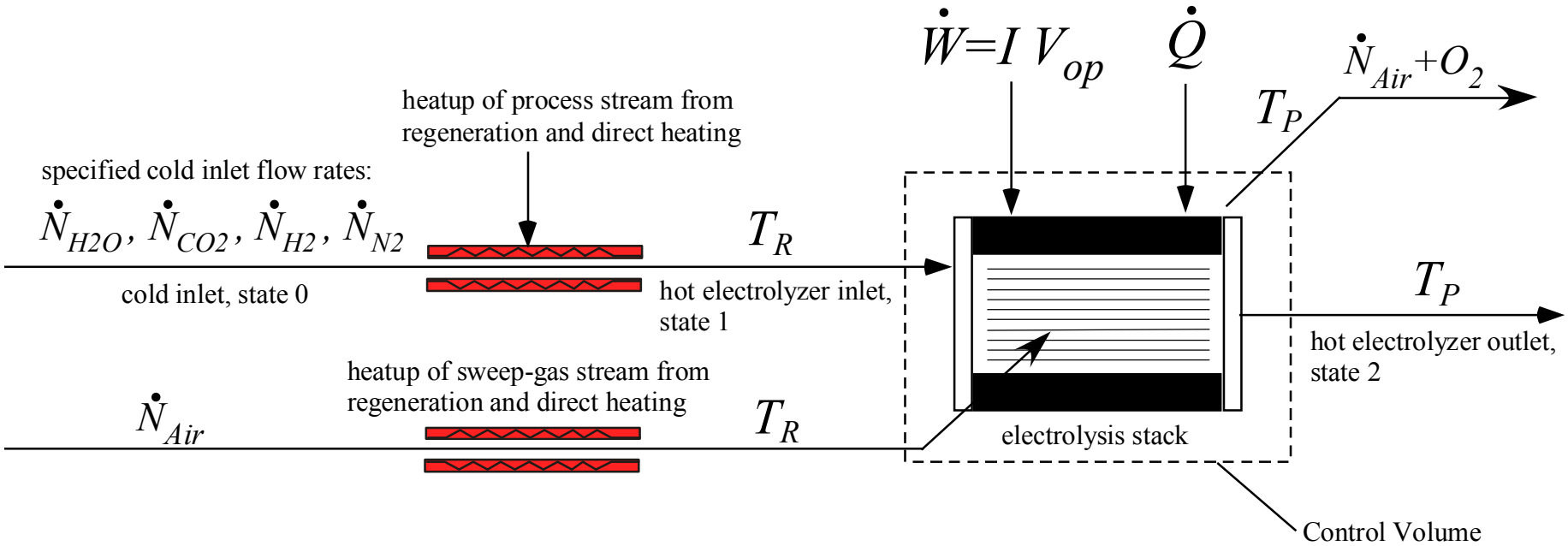

Chemical Equilibrium Coelectrolysis Model (cont)

Overall shift reaction without electrolysis:

$$y_{0,CO}\,CO + y_{0,CO2}\,CO2 + y_{0,H2}\,H2 + y_{0,H2O}\,H2O \xrightarrow{\text{heat}} y_{1,CO}\,CO + y_{1,CO2}\,CO2 + y_{1,H2}\,H2 + y_{1,H2O}\,H2O$$

Chemical Balance Equations (without electrolysis):

$$y_{0,CO} + y_{0,CO2} = y_{1,CO} + y_{1,CO2} \qquad \text{(carbon)}$$

$$2y_{0,H2} + 2y_{0,H2O} = 2y_{1,H2} + 2y_{1,H2O} \qquad \text{(hydrogen)}$$

$$y_{0,CO} + 2y_{0,CO2} + y_{0,H2O} = y_{1,CO} + 2y_{1,CO2} + y_{1,H2O} \qquad \text{(oxygen)}$$

Equilibrium Constant Equation: $$K_{eq}(T) = \frac{y_{1,CO2}\,y_{1,H2}}{y_{1,CO}\,y_{1,H2O}}$$

4 Equations, 4 unknowns – solve for hot electrolyzer inlet composition, state 1

Idaho National Laboratory

Chemical Equilibrium Coelectrolysis Model (cont)

Across the electrolyzer, the Chemical Balance Equation for oxygen must be modified to account for electrolytic reduction of the process gas:

$$y_{1,CO} + 2y_{1,CO2} + y_{1,H2O} = y_{2,CO} + 2y_{2,CO2} + y_{2,H2O} + \Delta n_O$$

where $\Delta n_O = \dfrac{I_e}{2F\dot{N}_{Tot}}$ (Relative molar rate of monatomic oxygen removal from the steam/CO_2 mixture)

Again,
4 Equations, 4 unknowns – can solve for hot electrolyzer outlet composition as a function of temperature

Idaho National Laboratory

Co-electrolysis Model, Energy Equation

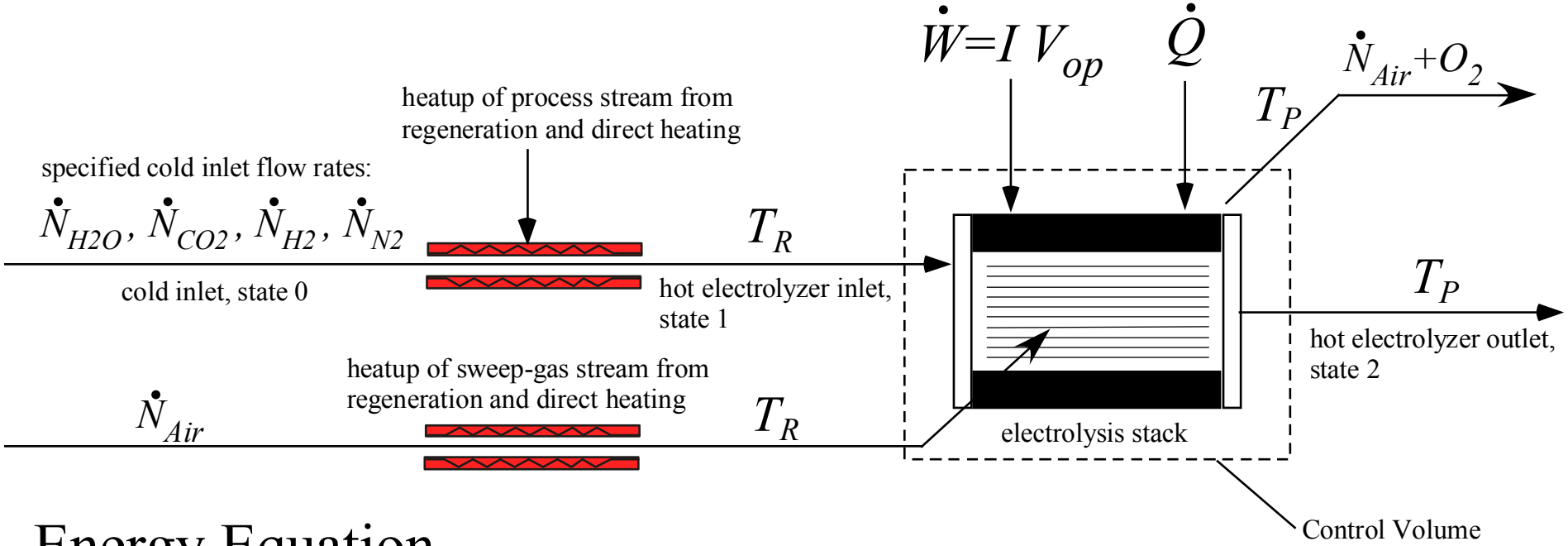

Energy Equation

$$\dot{Q}-\dot{W}=\sum_P \dot{N}_i[\Delta H^o_{f_i}+H_i(T_P)-H^o_i]-\sum_R \dot{N}_i[\Delta H^o_{f_i}+H_i(T_R)-H^o_i]$$

$\dot{Q}$ is specified (e.g., adiabatic) or isothermal operation can be assumed and $\dot{Q}$ can be determined

In general, T_P is unknown and must be determined iteratively

Representative Results – 1-D Coelectrolysis Model

The coelectrolysis equilibrium model was implemented analytically in MathCad and also incorporated into UniSim system analysis software for large-scale plant analysis; comparisons to 3-D CFD simulations using FLUENT were also performed

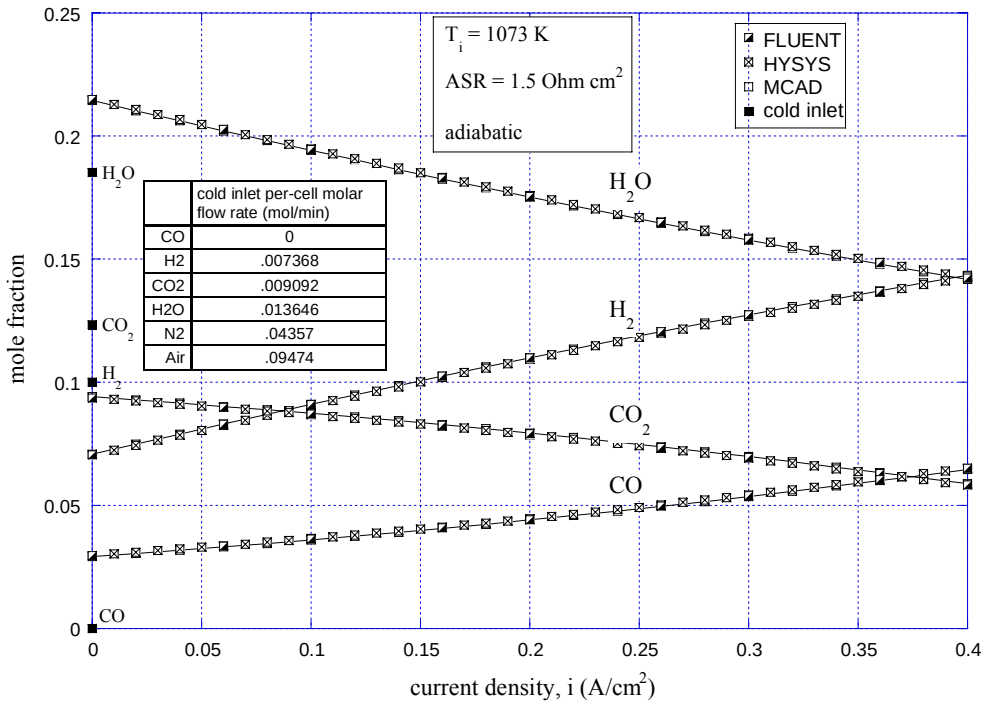

Variation of species mole fraction as a function of current density

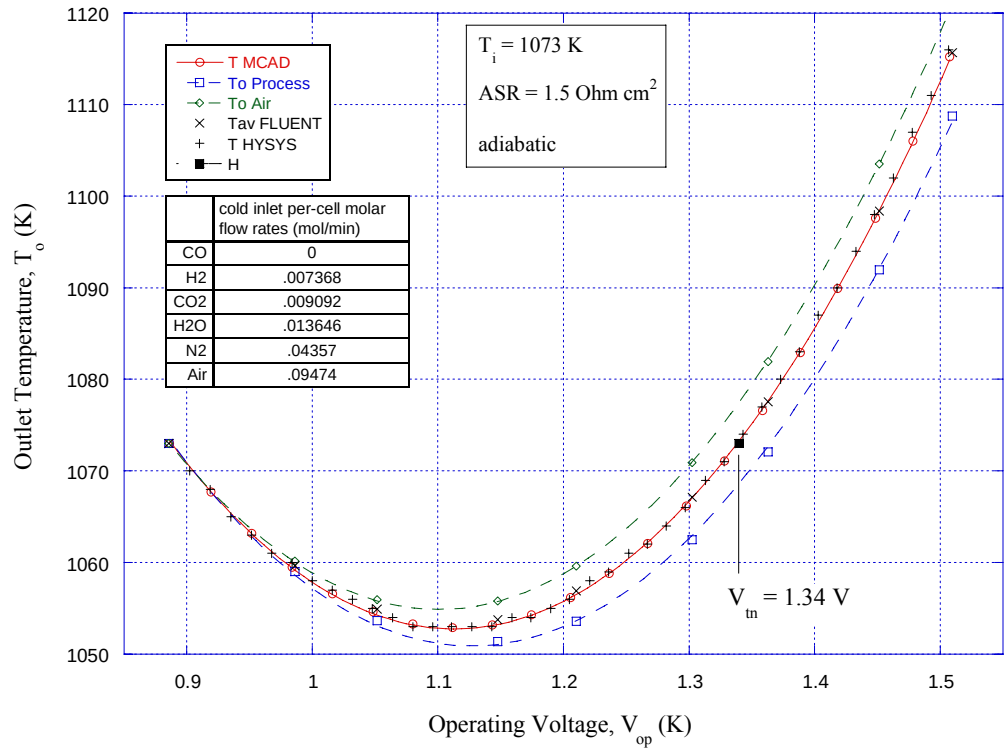

Electrolyzer outlet temperature as a function of operating voltage, adiabatic case

Idaho National Laboratory

The CEC model was developed for comparison to experimental results and for incorporation into UniSim system simulation analyses:

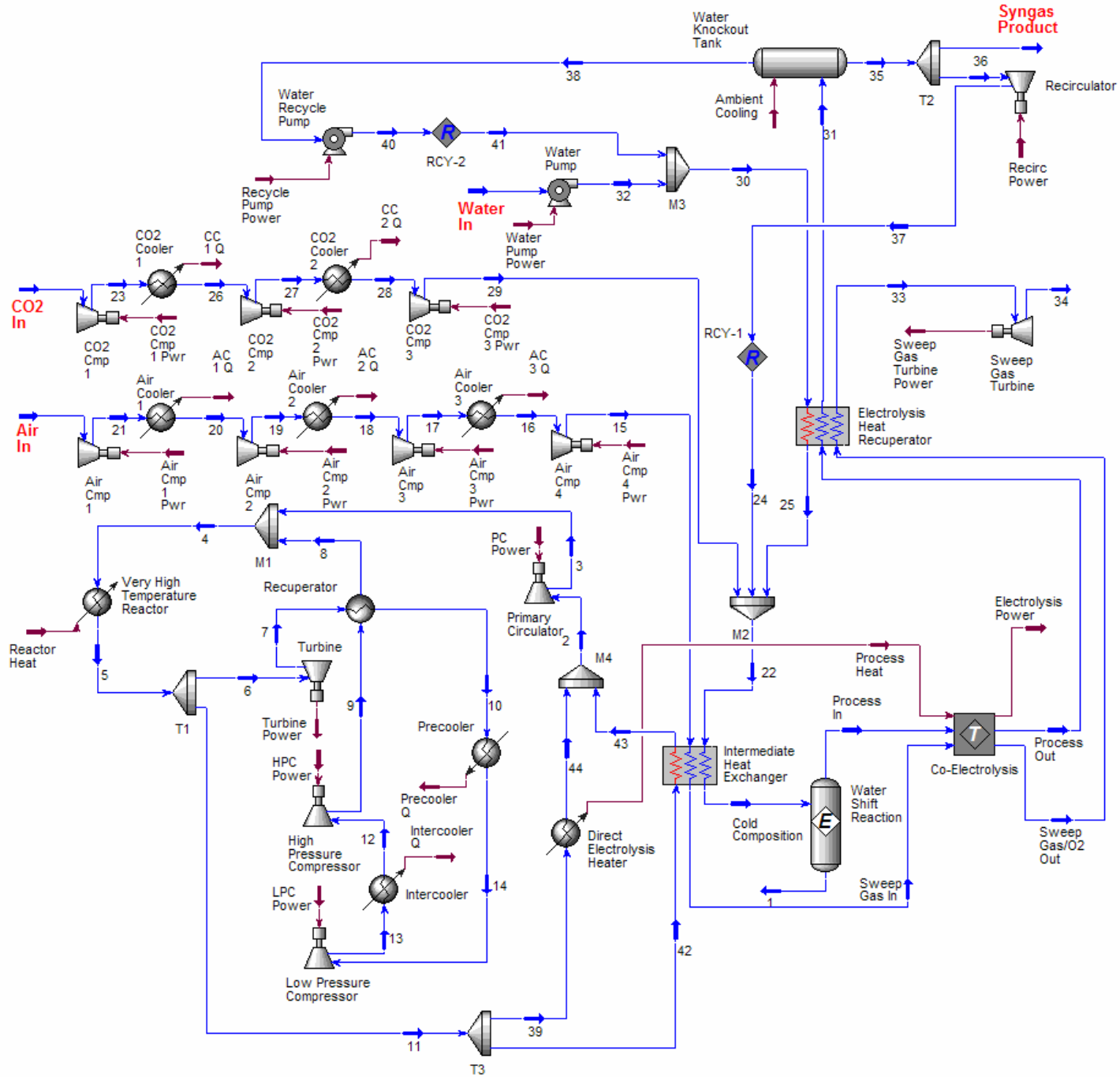

Process flow diagram for coelectrolysis plant

Constraints for Simulations

- Inlet composition: 10% H_2/CO, 90% H_2O/CO_2, set by adjusting the fraction of syngas product recycled back to the electrolysis process.
- Outlet composition for fixed oxygen utilization cases : 90% H_2/CO, 10% H_2O/CO_2 set by adjusting the total mass flow rate of the process gas into the electrolysis process as the current density was varied.
- y_{H2}/y_{CO} in the product stream was fixed at 2.12 by adjusting the carbon dioxide inlet flow rate. This ratio is optimal for the production of synthetic fuel using a Fischer Tropsch process with a cobalt catalyst.
- For the air-sweep cases, the oxygen mole fraction exiting the electrolysis process on the air side was fixed at 0.5 by adjusting the inlet air flow rate as the current density was varied.
- For the no-sweep cases, the air flow rate is zero and the outlet oxygen mole fraction is 1.0.
- The minimum approach temperature of the Electrolysis Heat Recuperator was set at 50°C by adjusting the flow split between the power cycle and the intermediate heat exchanger.
- The temperatures of the helium entering and exiting the reactor were fixed at 490°C and 900°C respectively.

Overall Thermal-to-Syngas Production Efficiency:

$$\eta_{syn} = \frac{\dot{N}_{H_2} LHV_{H_2} + \dot{N}_{CO} LHV_{CO}}{\sum_i \dot{Q}_i}$$

Idaho National Laboratory

Results of Commercial-Scale Analyses

Overall syngas production efficiencies for the air-sweep cases

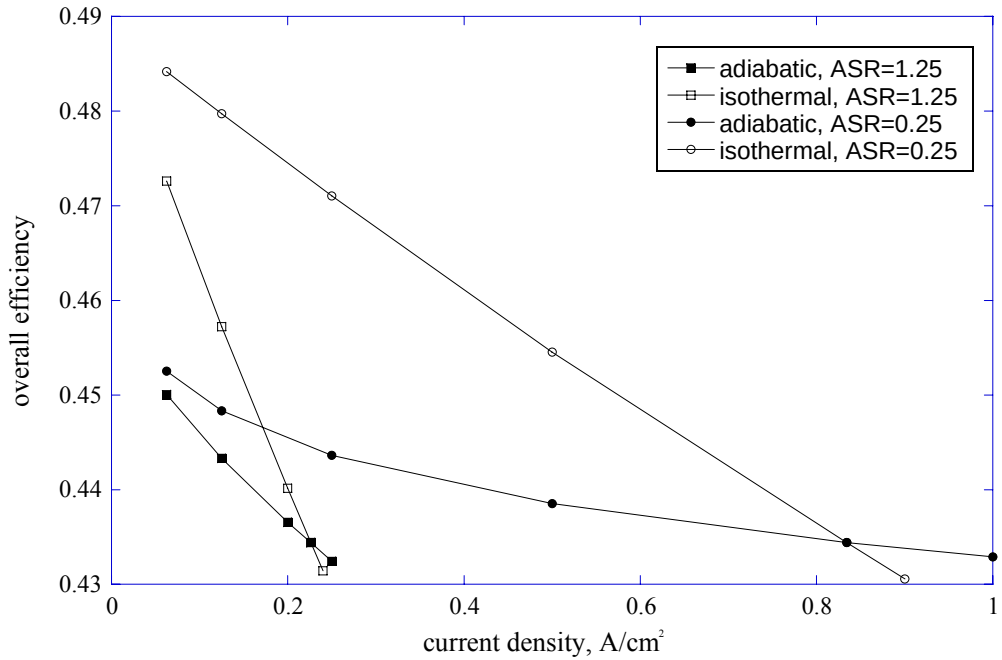

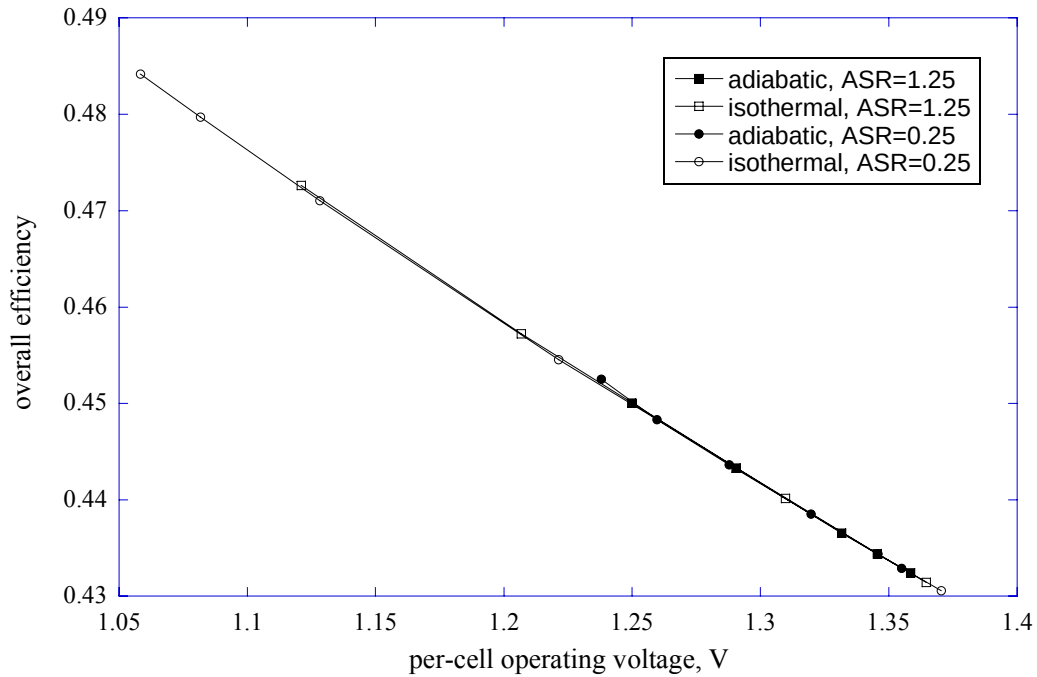

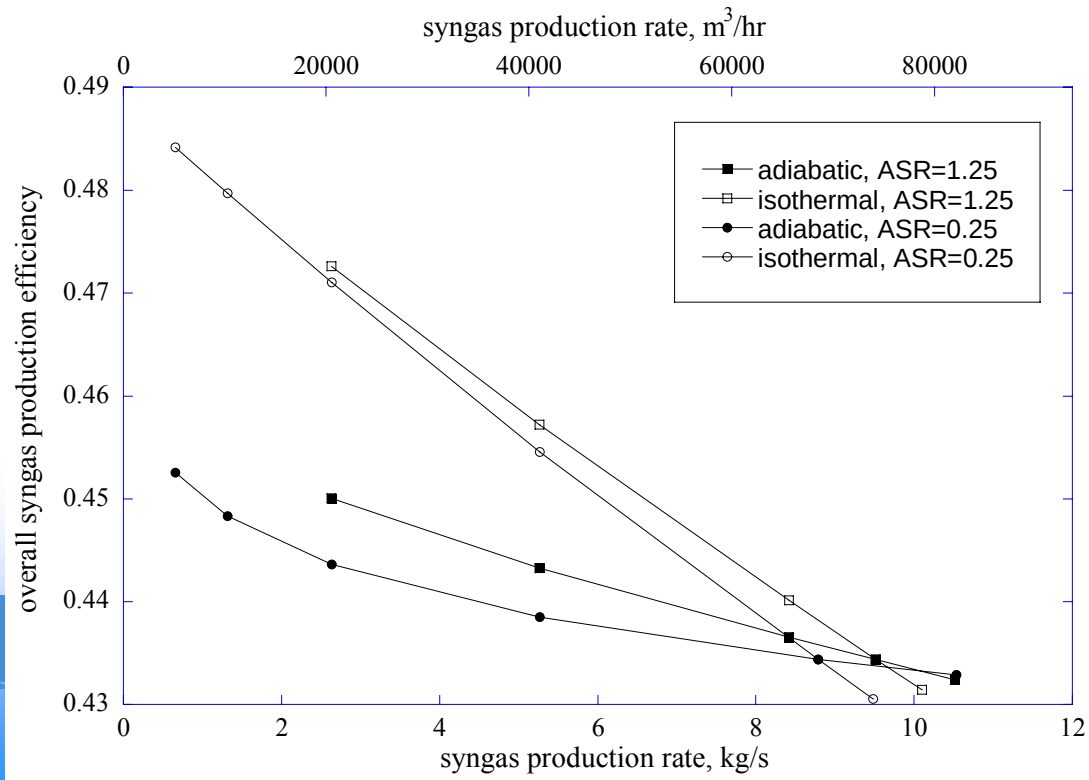

Note: the high-ASR cases require ~4 times as many cells to achieve the same syngas production rate

Overall syngas production efficiencies for the no-sweep cases

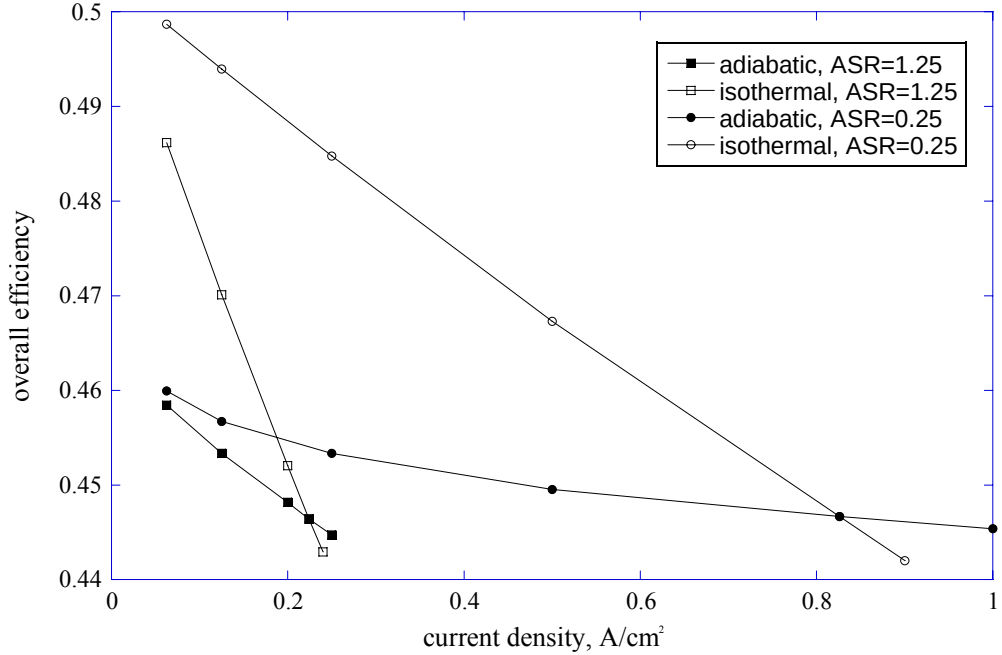

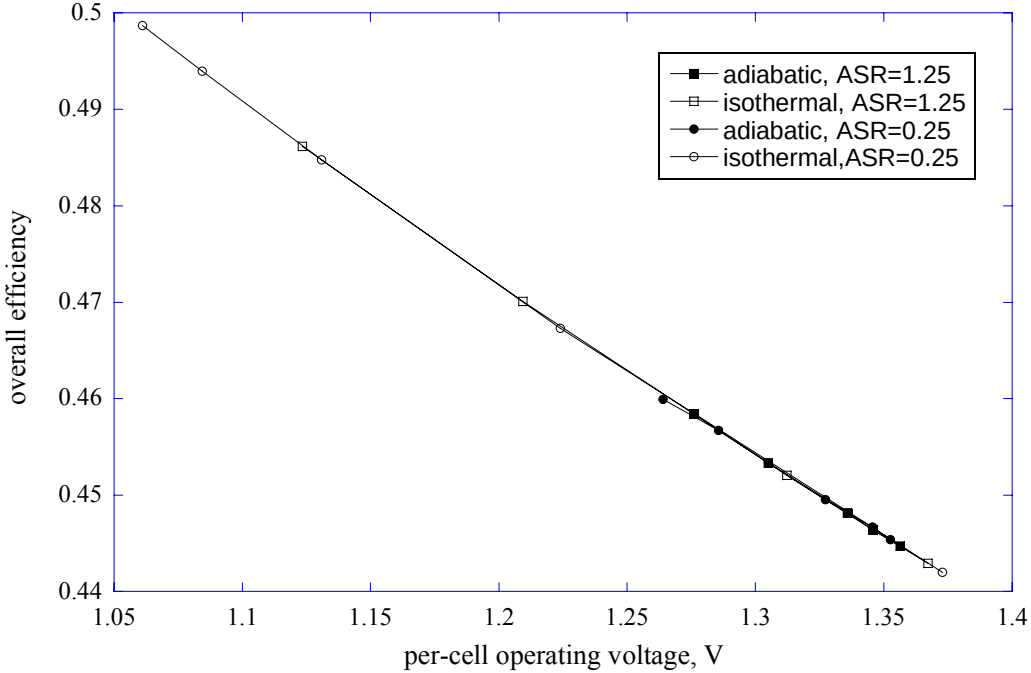

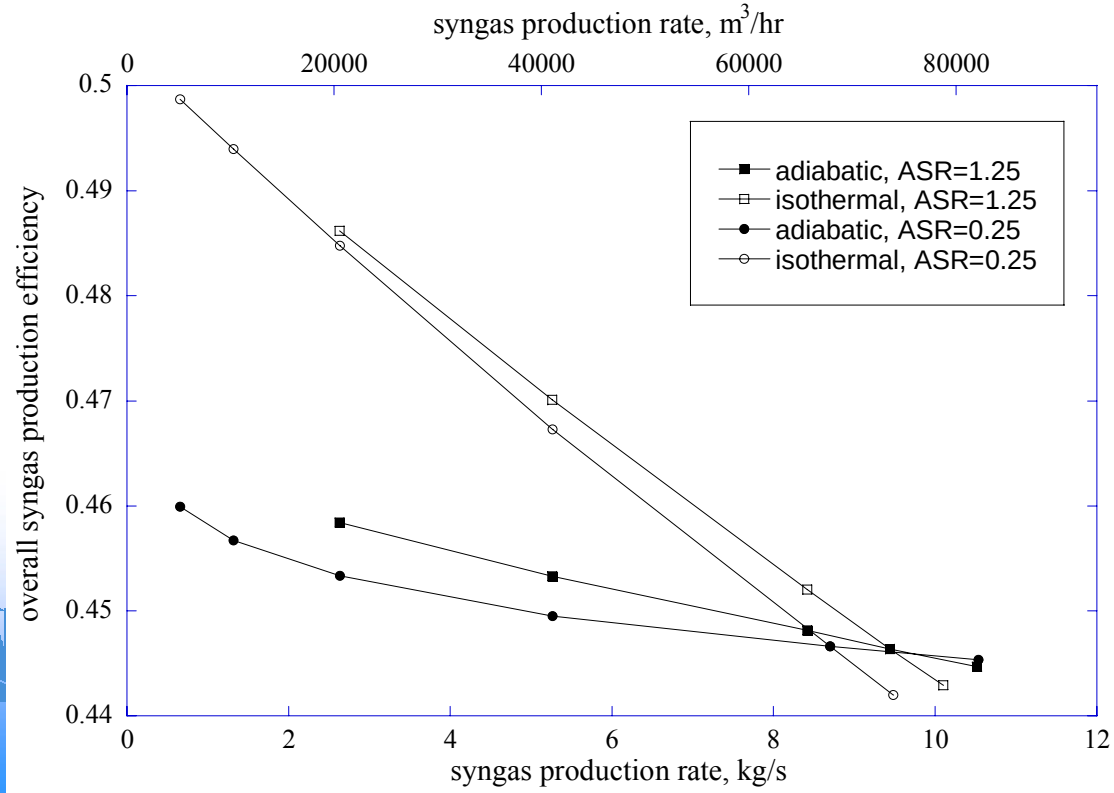

Note: 10 kg/s of syngas production is enough to generate ~ 4,900 gal/hr (118,000 gal/day) of diesel fuel.

Overall syngas production efficiency for a fixed electrolyzer inlet flow rate (variable utilization) with air sweep

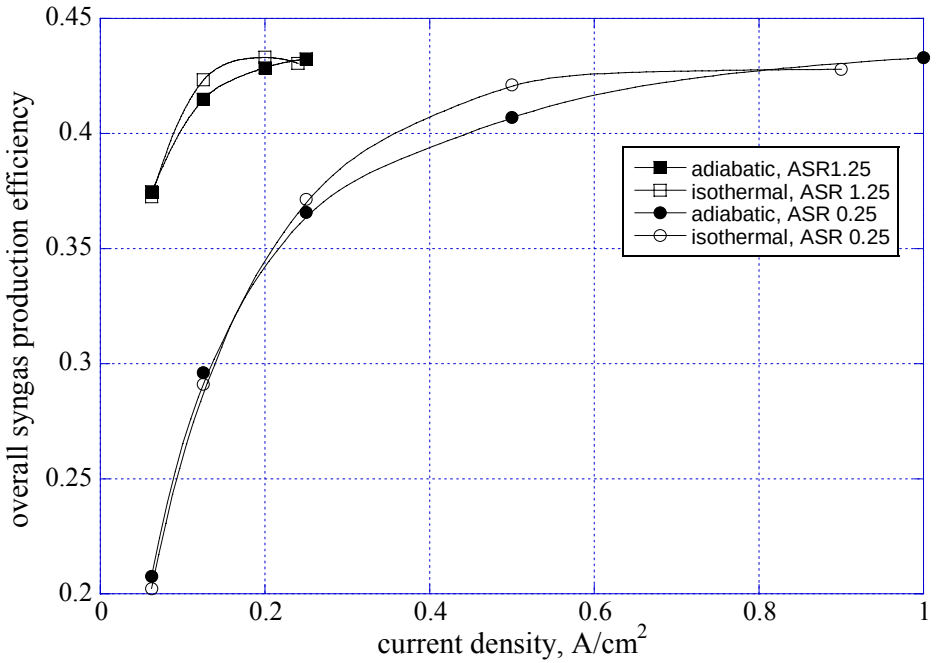

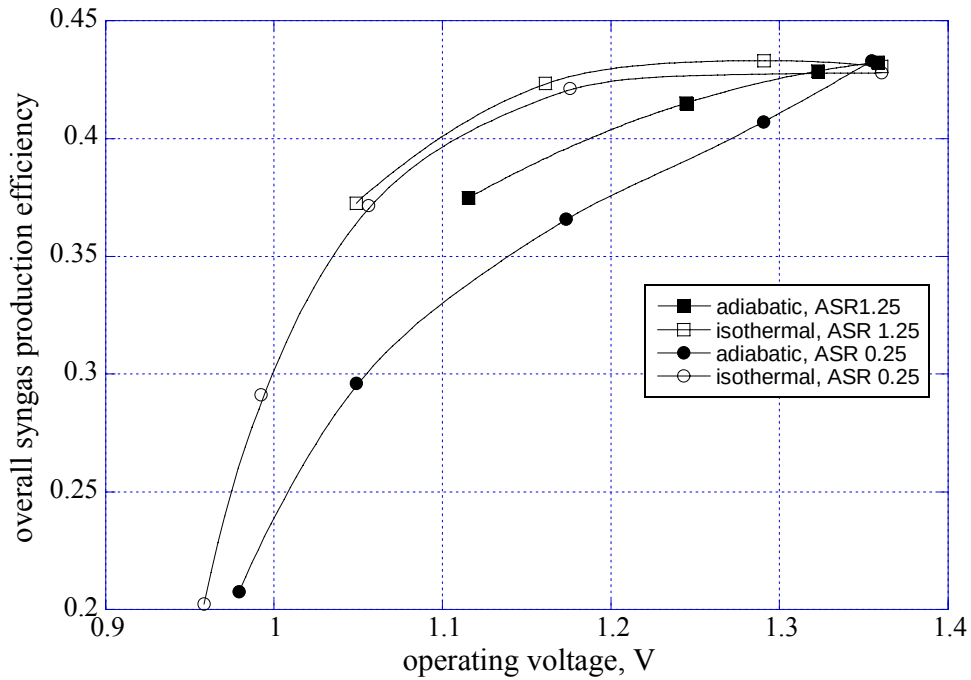

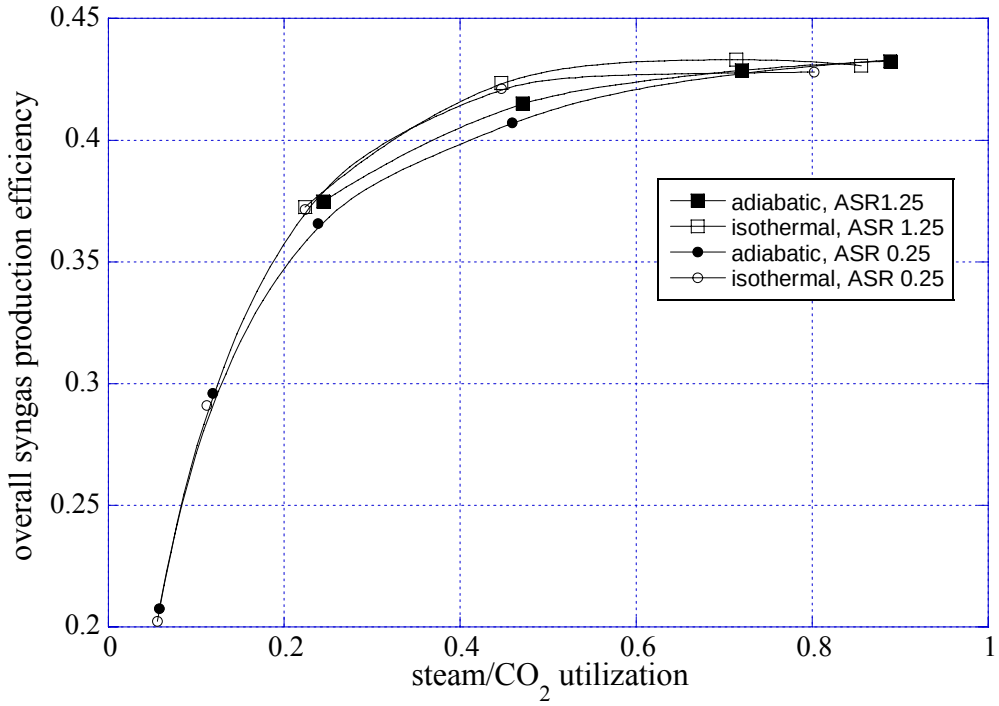

Low utilization is inefficient due to processing of excess flows, incomplete heat recuperation, etc.

Effect of reactor outlet temperature on power cycle and overall syngas production efficiencies at thermal-neutral voltage

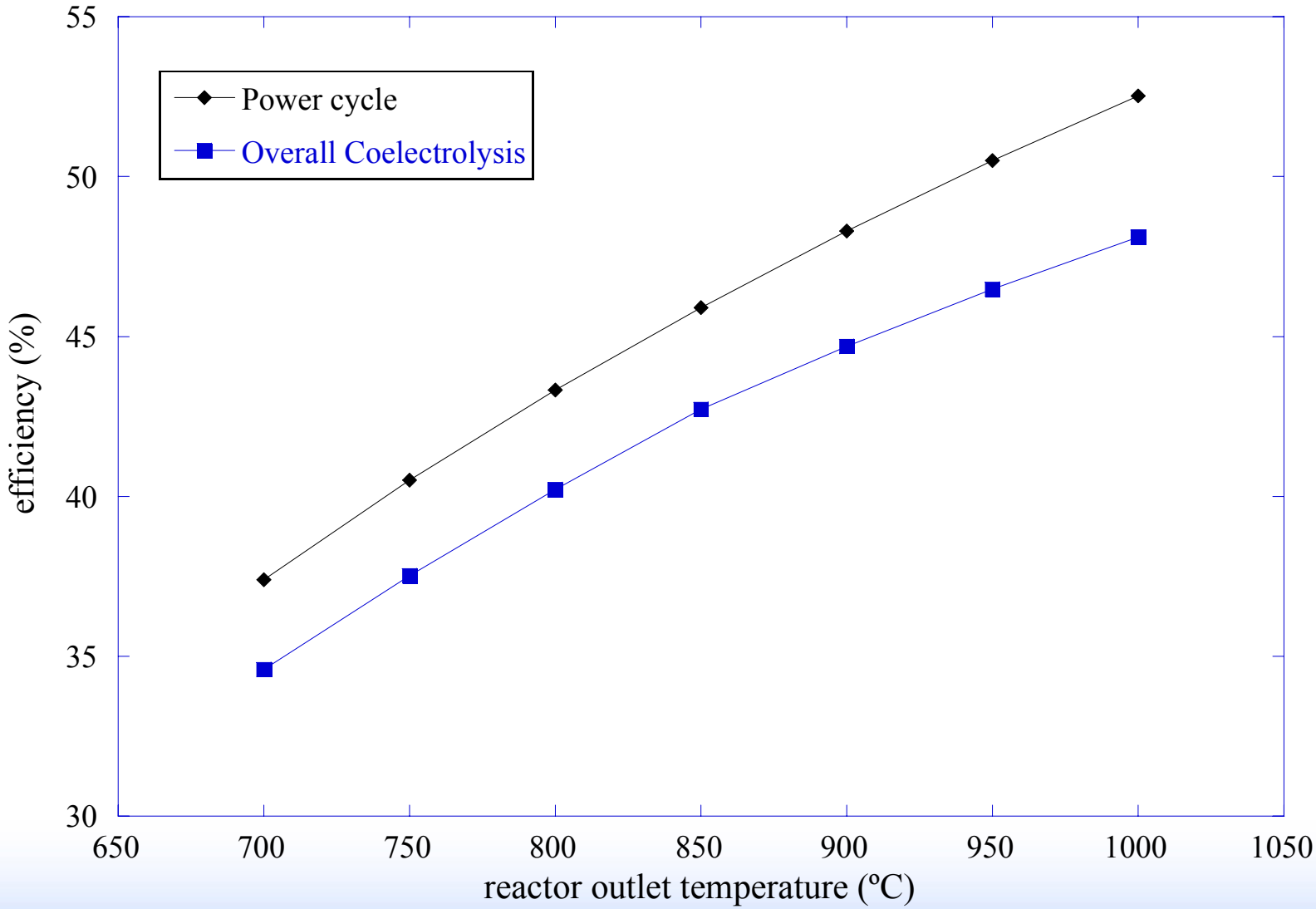

Idaho National Laboratory

Summary and Conclusions

- An engineering process model has been developed for performance evaluation of large-scale syngas production plants based on high-temperature co-electrolysis of carbon dioxide and steam
- The process model includes a validated chemical equilibrium coelectrolysis (CEC) model to predict electrolyzer outlet compositions and temperatures
- Overall thermal-to-syngas process efficiencies of 43 – 48 % were predicted with realistic modeling assumptions, including realistic treatment of heat exchanger performance
- Higher process efficiencies result at higher reactor outlet temperatures due to increased power cycle and electrolyzer efficiencies.

Future Work

Integrate flowsheet analysis with economic analysis to assess the economic feasibility of synthetic fuels production via coelectrolysis/FT over a range of scenarios