Texas A&M RCCS Experimental Facility RELAP5-3D Simulations

Authors: Rodolfo Vaghetto, Yassin A. Hassan

2011 RELAP5 International User's Group Seminar and Meeting

July 25-28, 2011 Salt Lake City, UT

Table of Content

- Experimental Facility Overview
- RELAP5-3D Model
- RELAP5-3D Simulation Results
- StarCCM$^+$ / RELAP5-3D Coupling

Texas A&M RCCS Experimental Facility Overview

Facility Overview

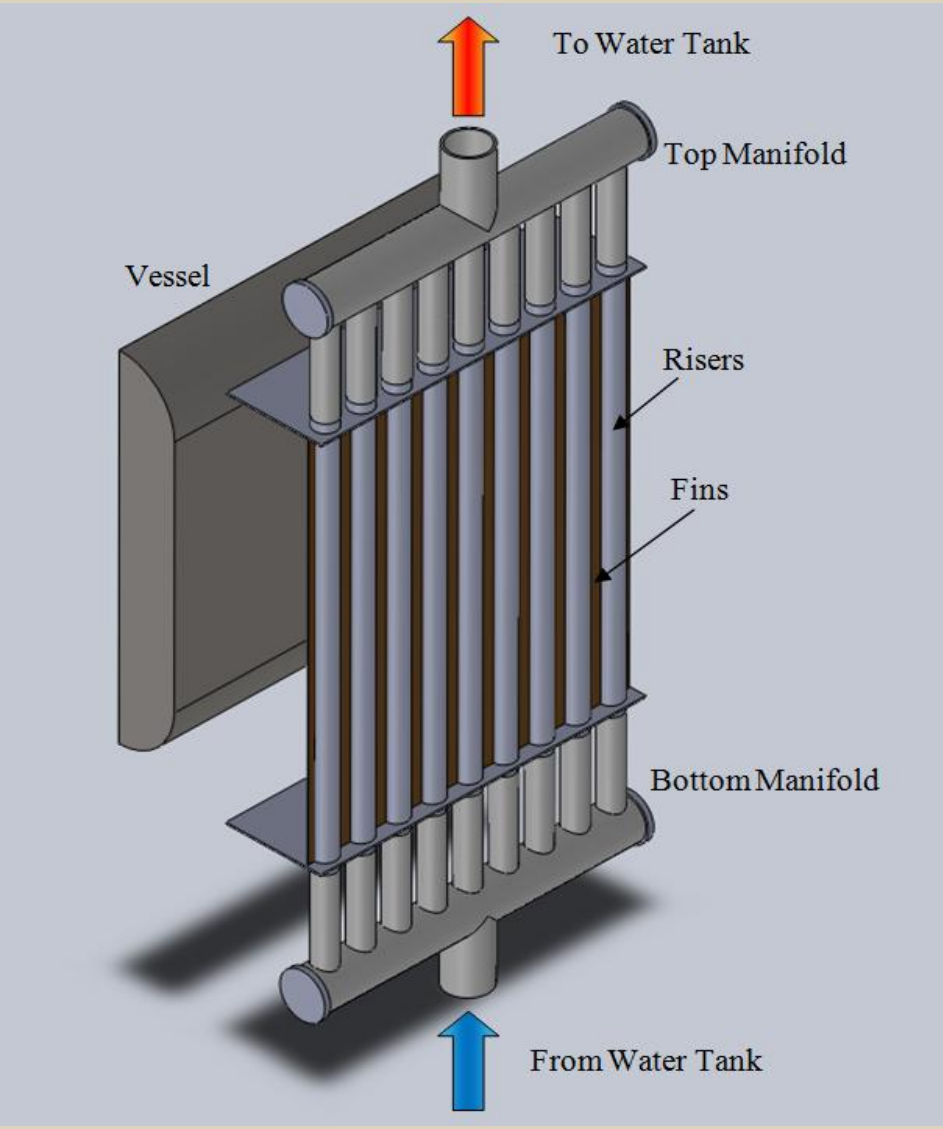

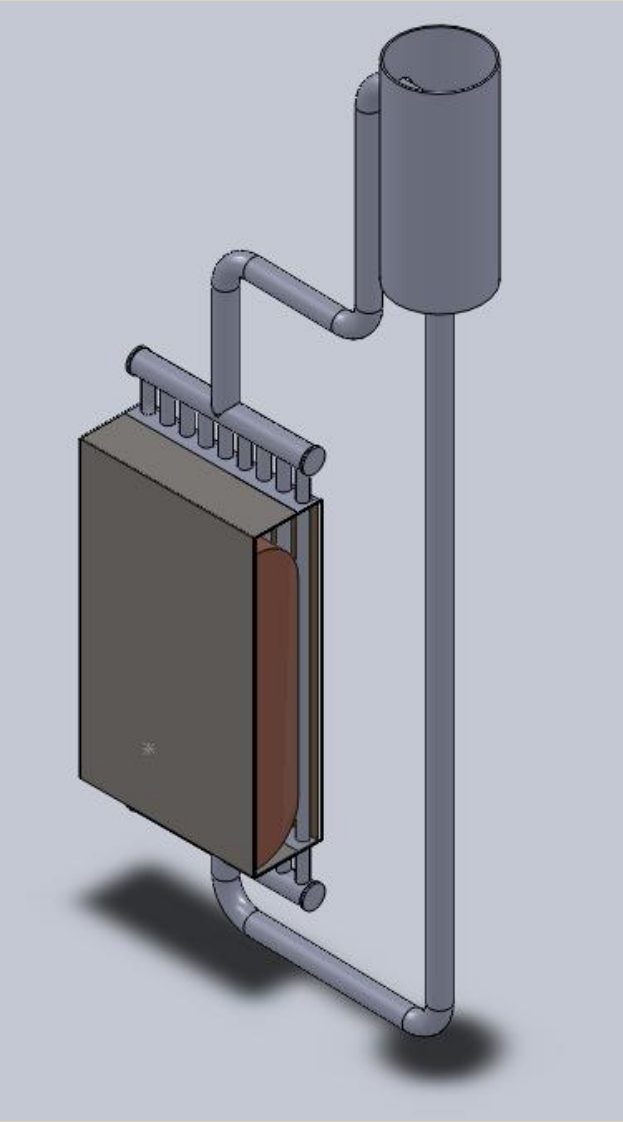

RELAP5-3D Model

RELAP5-3D Hydrodynamic Model

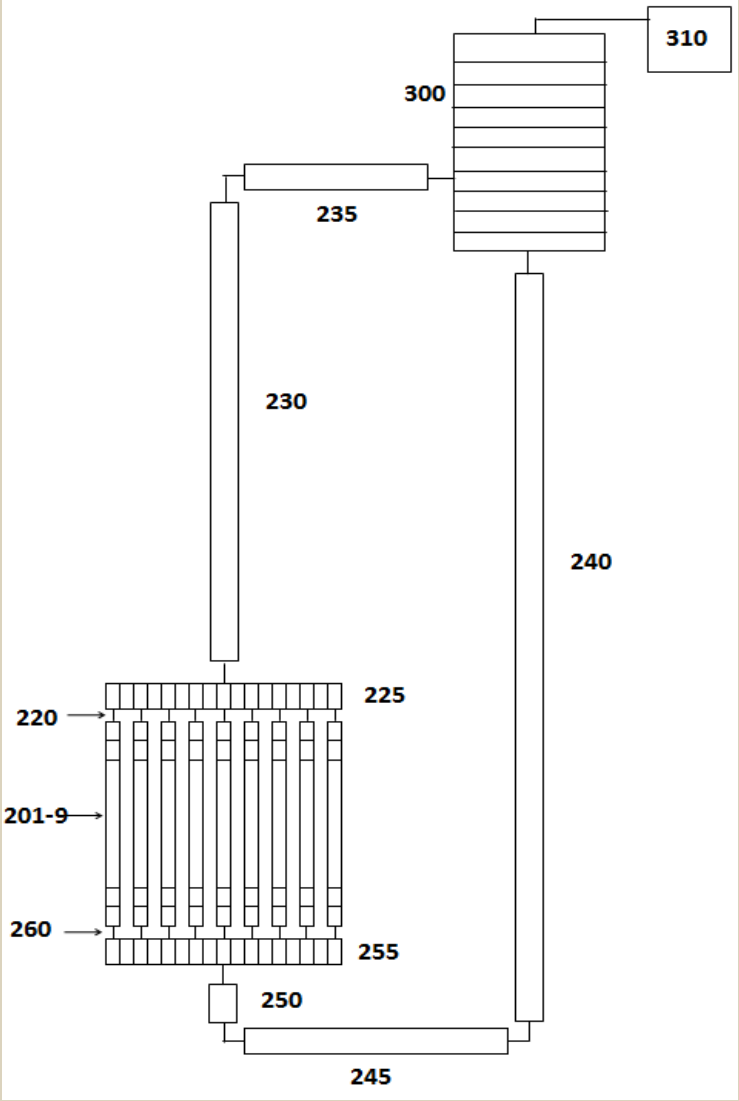

Experimental Facility

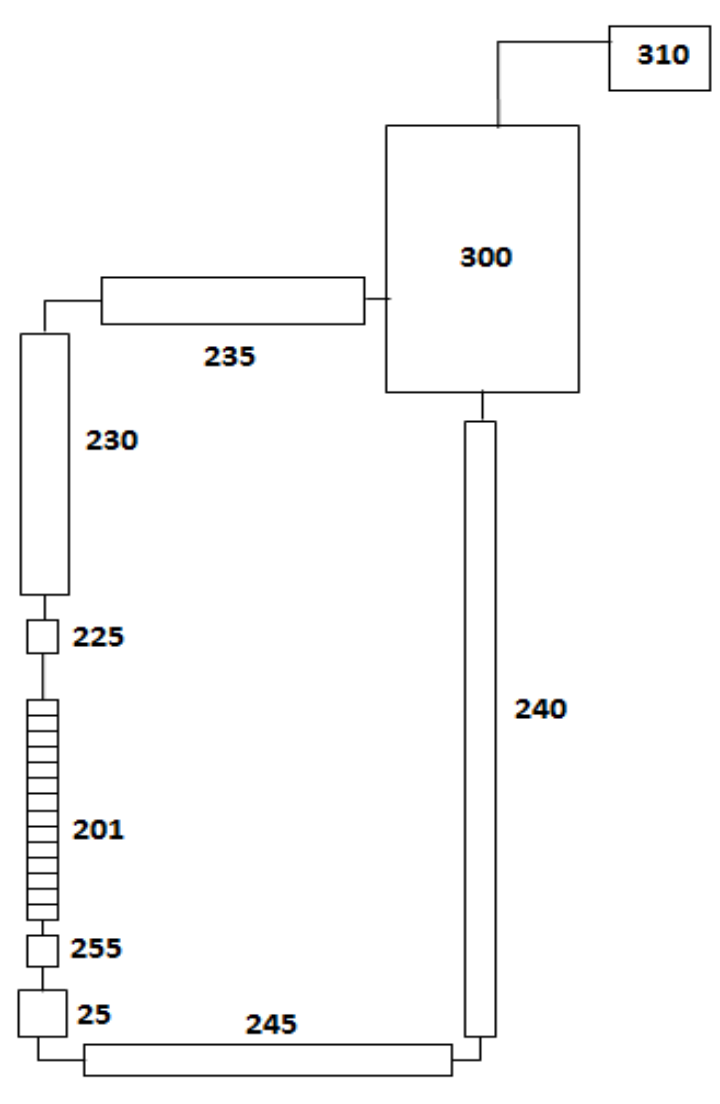

Full Plant

RELAP5-3D Heat Structures/Enclosures

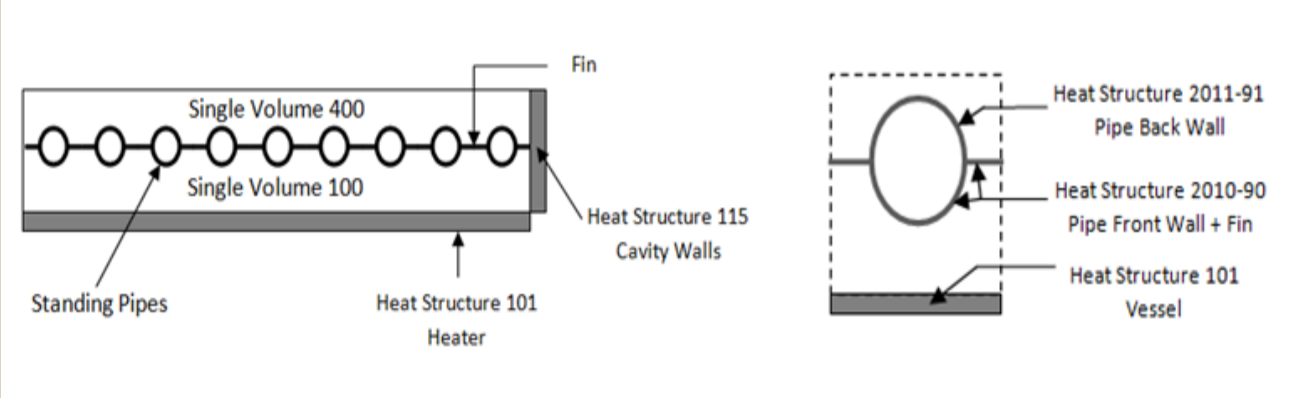

HS #	Component	Convection	Radiation
101	Vessel	✓	✓
115	Cavity Walls	✓	✓
2010-2090	Pipe/Fin Front Walls	✓	✓
2011-2091	Pipes Back Walls	✓	

In the first calculations:

- No heat losses through the pipes between cavity and tank
- No heat Losses through the tank walls

Nevada™ View Factor Calculations

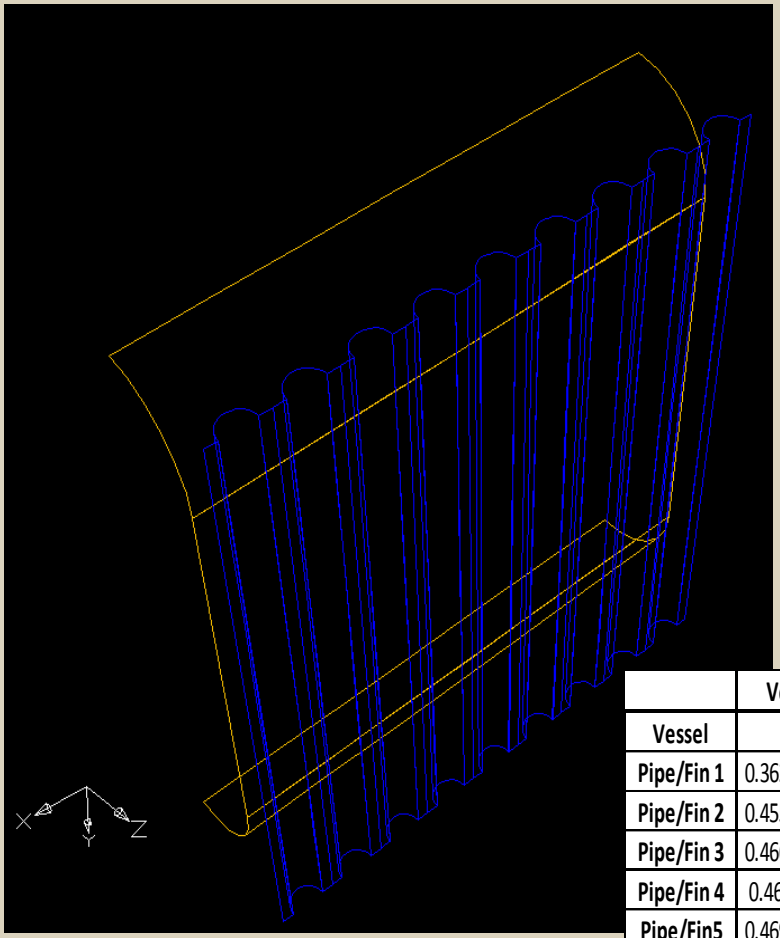

Input Geometry

View Factors

	Vessel	Pipe/Fin 1	Pipe/Fin 2	Pipe/Fin 3	Pipe/Fin 4	Pipe/Fin5	Pipe/Fin 6	Pipe/Fin 7	Pipe/Fin 8	Pipe/Fin 9	Cavity Walls
Vessel	0	0.085056	0.106983	0.109572	0.109981	0.110126	0.109981	0.109572	0.106983	0.085056	0.06669
Pipe/Fin 1	0.362298801	0.116379	0.066142	0	0	0	0	0	0	0	0.455153
Pipe/Fin 2	0.455697571	0.066142	0.116379	0.066142	0	0	0	0	0	0	0.295739
Pipe/Fin 3	0.466725501	0	0.066142	0.116379	0.066142	0	0	0	0	0	0.284561
Pipe/Fin 4	0.46846765	0	0	0.066142	0.116379	0.066142	0	0	0	0	0.282655
Pipe/Fin5	0.469085282	0	0	0	0.066142	0.116379	0.066142	0	0	0	0.282279
Pipe/Fin 6	0.46846765	0	0	0	0	0.066142	0.116379	0.066142	0	0	0.282655
Pipe/Fin 7	0.466725501	0	0	0	0	0	0.066142	0.116379	0.066142	0	0.284561
Pipe/Fin 8	0.455697571	0	0	0	0	0	0	0.066142	0.116379	0.066142	0.295739
Pipe/Fin 9	0.362298801	0	0	0	0	0	0	0	0.066142	0.116379	0.455153
Cavity Walls	0.088695504	0.1421138	0.092339506	0.0888494	0.088254248	0.088137	0.088254248	0.0888494	0.092339506	0.1421138	0

RELAP5-3D Simulation Results

Steady-State – Scaling Laws Verification

	0.7MW		1.5MW		2MW	
	Tin	Tout	Tin	Tout	Tin	Tout
Full	295	306	293.6 K	311.8 K	292.9 K	314.7 K
Scaled	294	305.2	293.6 K	311 K	293.4	314.4 K

If power is scaled with $(l_R)^{0.5}$, ΔT_{risers} is preserved!

Transient: Energy Balance

	Power [W]	%
Total Power	12,509.70	100.0
Convection to Pipes/Fin	1,352.80	10.81
Radiation to Pipes/Fin	10,593.98	84.69
Losses (rad + conv)	562.92	4.50

StarCCM+ / RELAP5-3D Coupling

Sample Case

- Working Fluid
  - Air: Ideal Gas
- Segregated Solver
- Transient Analysis
- Turbulence
  - Realizable K-ε Two Layer
- Gravity Enabled

Geometry

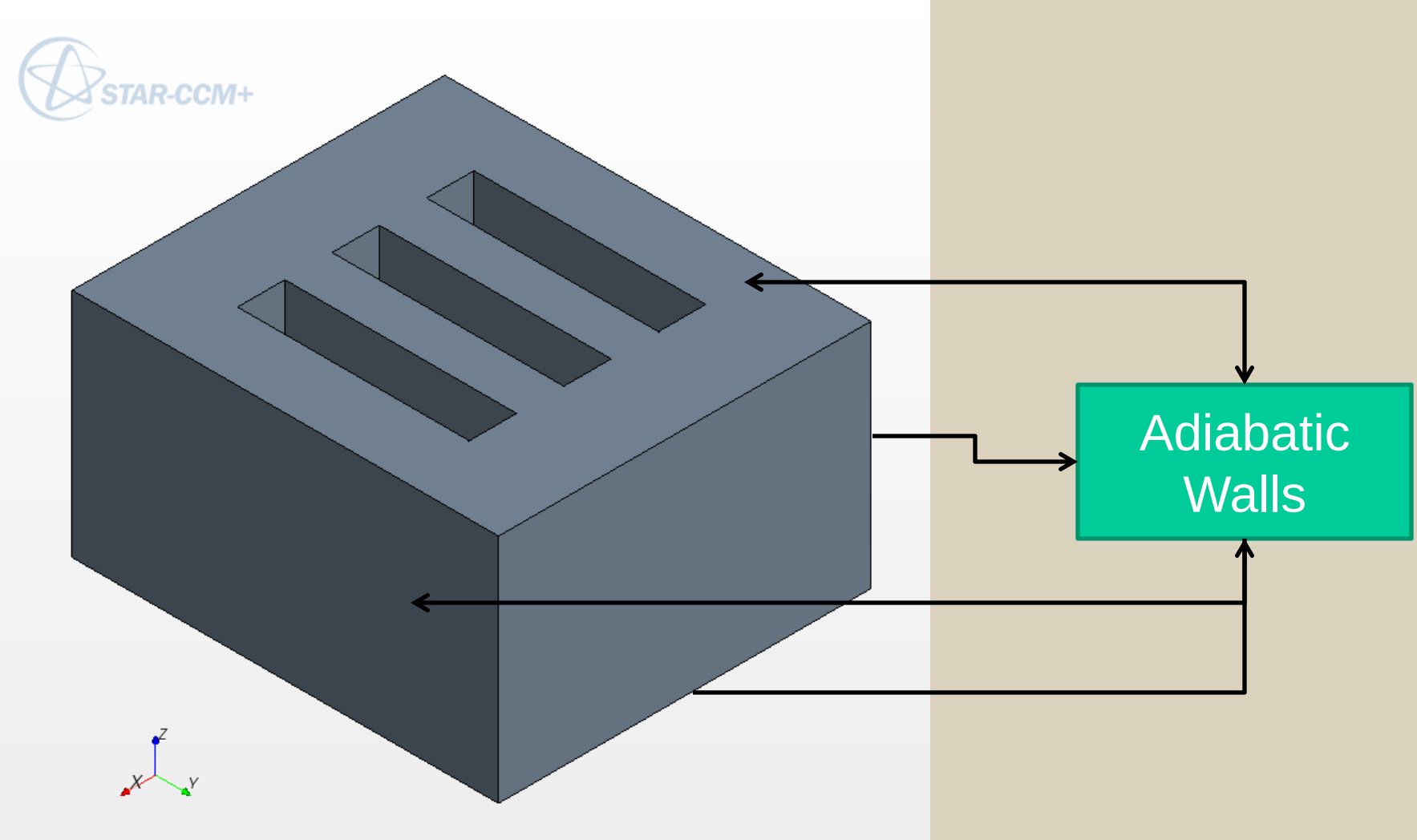

RELAP Coupled Walls

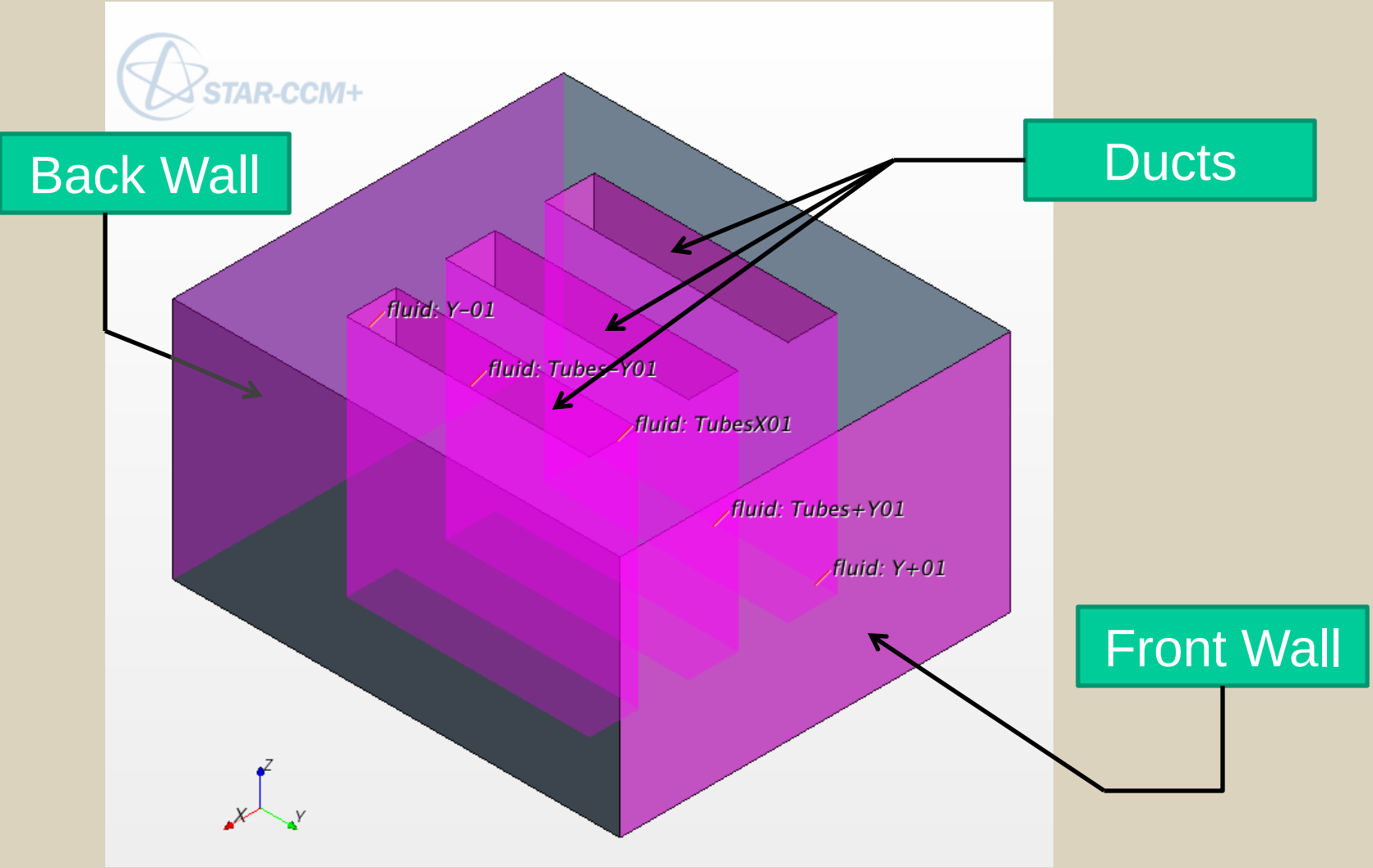

Heated Wall

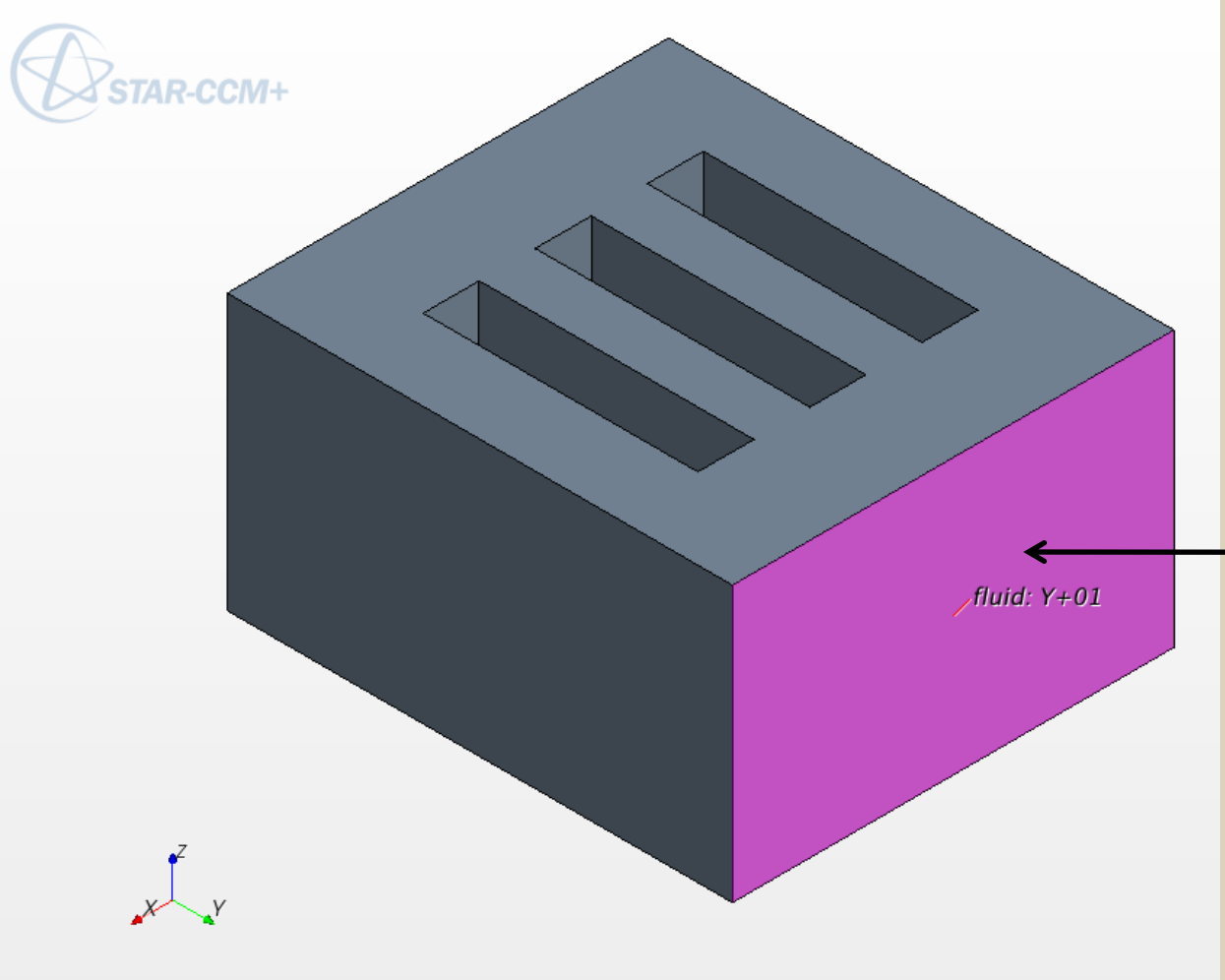

Heated Wall

Temperature Profile

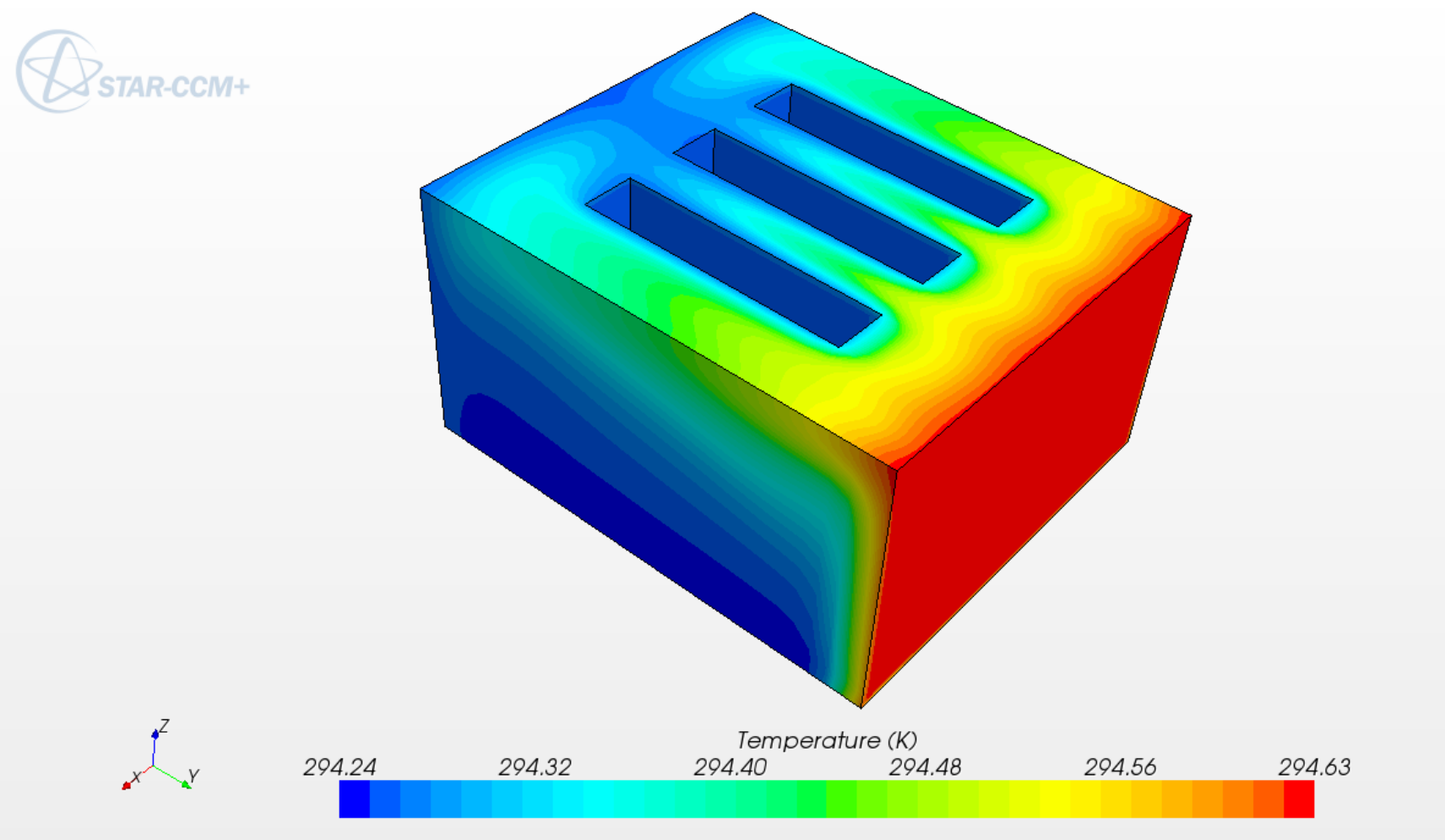

Texas A&M Experimental Facility

- Flow coupling
  - STAR-CCM+ requires inlet boundary conditions
  - TDV provides Temperature and Pressure
  - Junction provides Mass Flux
  - Flow coupling is only implemented at STAR-CCM+ inlets
  - Issues when coupling inlet/outlet with incompressible fluids in closed loops.

Texas A&M Experimental Facility

- StarCCM+ performs the calculations for the water inside the risers
- RELAP5 provides boundary conditions and calculates the heat transfer through the cavity (radiation + convection)

New Approach for Flow Coupling

- The loop was substituted with two TDV with junctions
- The boundary conditions such as pressure, temperature and mass flow rate from RELAP5 where set into StarCCM.
- Heat Transfer through the cavity (radiation + convection) is coupled.

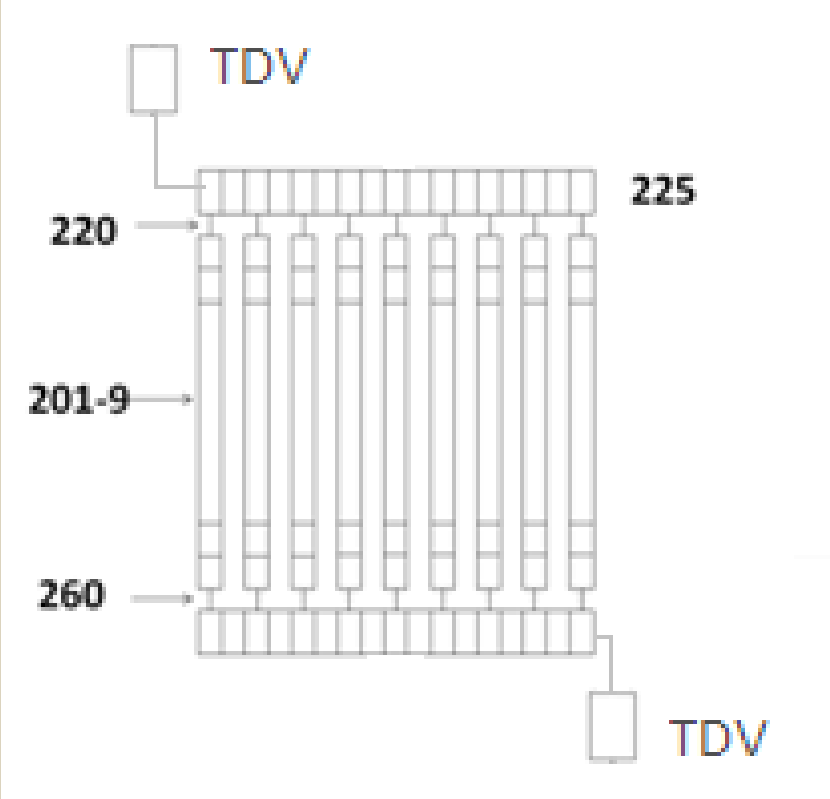

STAR-CCM+ Geometry

Top Manifold Outlet

Heated Section

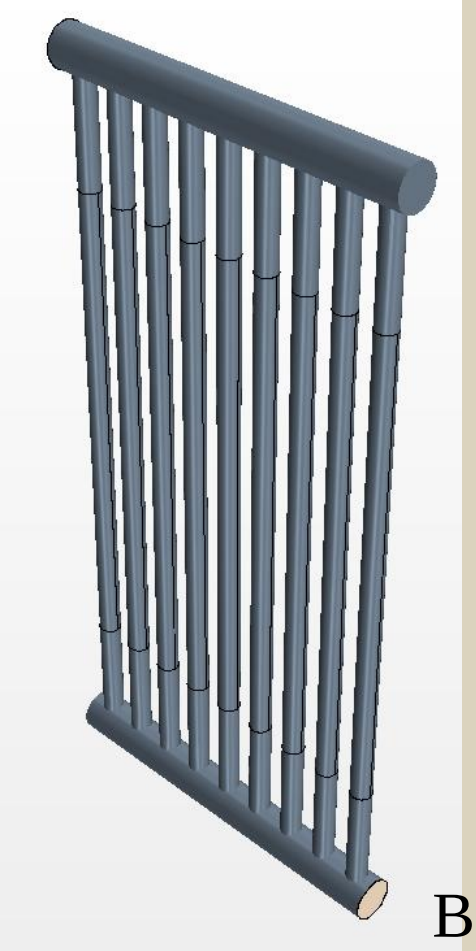

Bottom Manifold (Inlet)